amateur radio

JOURNAL OF THE WIRELESS INSTITUTE OF AUSTRALIA

JULY, 1973
Vol. 41, No. 7

Registered at G.P.O., Melbourne for transmission by post as a periodical Category "B".

Price 40 cents

Customs Import Duties
Digital Electronic Keyers
1973 RD Contest Rules

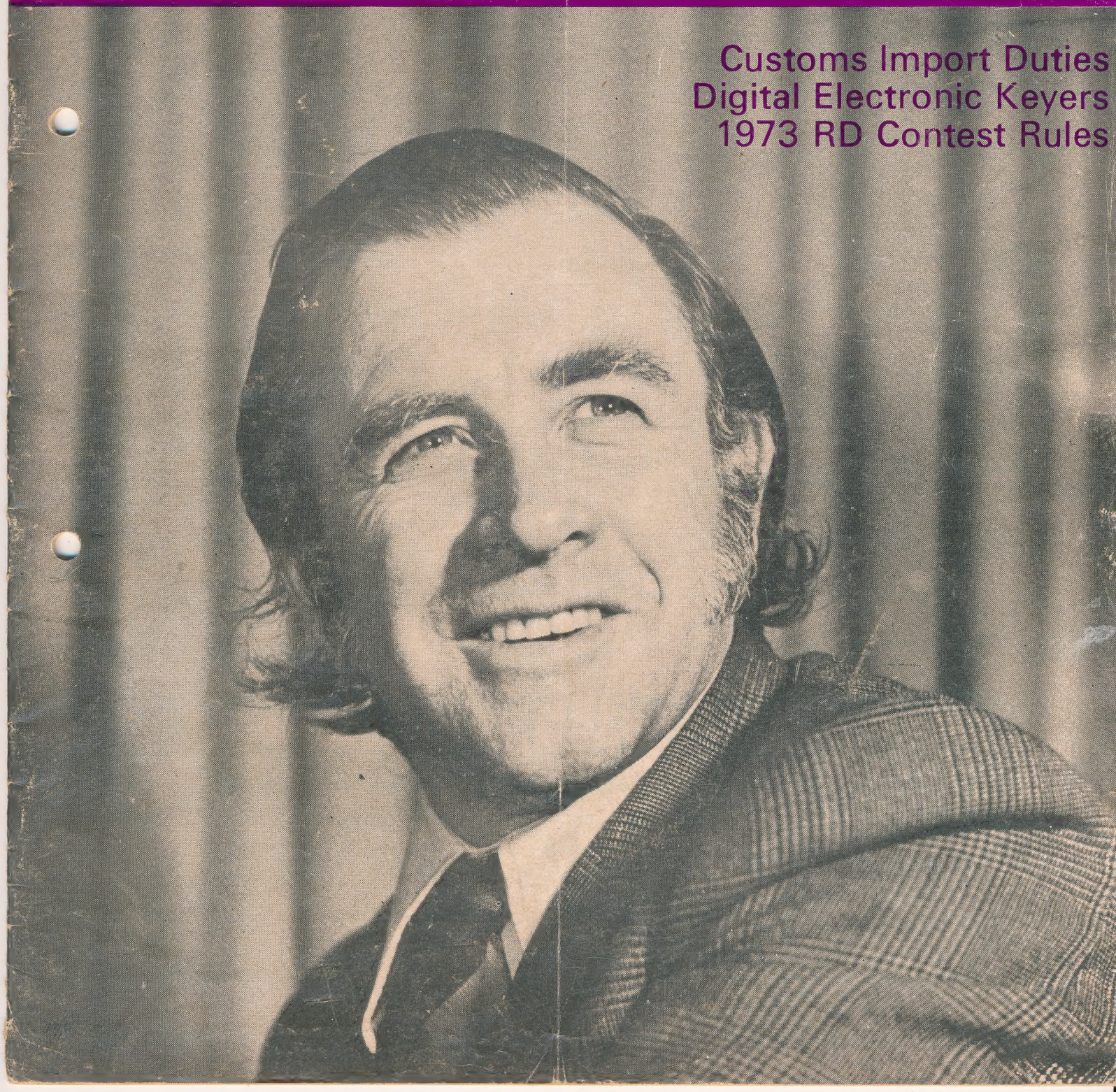

AMATEUR CRYSTALS

VHF BAND — 144 MHz. FM

HC6 Holders, ½ inch spacing

Channel A	Transmit	4,051.55 kHz.
	Receive	10,275.35 kHz.
Channel B	Transmit	4,055.5 kHz.
	Receive	10,285.71 kHz.
Channel C	Transmit	4,059.61 kHz.
	Receive	10,296.14 kHz.
Channel Z	Transmit	4,048.88 kHz.
	Receive	10,411.55 kHz.
Channel 4	Transmit	4,066.66 kHz.
	Receive	10,278.57 kHz.
Channel 1	Transmit	4,058.33 kHz.
	Receive	10,257.14 kHz.

Price $5.50 each

MARKER CRYSTALS

100 kHz. Marker	**$12.00**
1,000 kHz. Marker	**$12.00**
3,500 kHz. Marker	**$5.50**
5,500 kHz. Marker	**$5.50**

COMMERCIAL FREQ. CRYSTALS

HC6 Holders, ½ inch spacing

2,182 kHz.	2,637 kHz.	4,535 kHz.
2,524 kHz.	2,739 kHz.	6,280 kHz.
2,603 kHz.	2,979 kHz.	6,735 kHz.
	4,095 kHz.	

Price $5.50 each

LOW PASS FILTERS

A "Cabena" Low Pass Filter will fix TVI. Cut-off frequency 30 MHz.; attenuation at 60 MHz. better than 30 dB.; insertion loss, negligible. Impedance 50-72 ohms.

Price $12.90, Postage 10c

AUTO CAR AERIALS

Hirschmann, Type 300N, side mounting, new.

Price $4.50, Postage 20c

INSTRUMENT CASES

Sloping front panel. Plastic case, metal front panel, 7¼ x 4¼ x 5 inches. Suitable for radio, test equipment, projects, etc.

Price $3.50 inc. S.T., Postage 10c

AC ADAPTOR—BATTERY SAVER

Type PS64—240v. to 4.5, 6, 7.5, 9v., 300 mA.	$14.50
Type PS62—240v. to 6 or 9v., 100 mA.	$9.50

Postage 30c.

SOLDERING IRONS

ADCOLA M70 1/8 inch tip, 240 volt	**$8.00**
ADCOLA M64 3/16 inch tip, 240 volt	**$8.40**
SCOPE 4 volts AC/DC, 100 watts	**$6.40**
MINISCOPE	**$6.00**
SCOPE De Luxe	**$7.00**

Postage 20c.

SOLDERING IRON TRANSFORMER

240 volts/3.3 volts, 100 V/A. **$6.40**

Postage 40c.

RESIN SOLDER

Five-Core, 60/40	**$2.50**
Five-Core, 40/60	**$2.20**
Solder Pack, 42 inches	**18c**

BURGLAR ALARM SIREN

6 Volt. Suit Burglar Alarms, Boats, Fire Brigades, etc. Complete with mounting bracket. Available in 12 volt.

Price $10.50 each

TRIO COMM. RECEIVER

Trio Model 9R59DE, four bands covering 540 kHz. to 30 MHz., two mechanical filters for maximum selectivity, product detector for SSB reception, large tuning and bandspread dials for accurate tuning, automatic noise limiter, calibrated electrical bandspread, S meter and BFO, 2 microvolts sensitivity for 10 dB. S-N ratio.

Price $185.00

TRADE-IN ACCEPTED

6 BAND RECEIVER

The "Guardian 6600" is the latest de-luxe version of Lafayette's most advanced Portable Battery/Electric Radio and Direction Finder. Six interesting bands are covered. The Radio Direction Finding Facilities enable the boat owner to obtain bearings from stations on the Long Wave, Broadcast and Marine Bands. Other features include a combined Tuning Meter/Battery Condition Indicator; adjustable Telescopic Whip Antenna; adjustable squelch to eliminate background noise on VHF bands; output jacks to use with headphones or external speaker; and adjustable R.F. gain control to vary the sensitivity of the radio and tuning meter for direction finding purposes. Supplied complete with Batteries, Earphone, and Comprehensive Operating Manual with Direction Finding Instructions and Circuit Diagram.

SIZE: 11½" W x 10½" H. x 3¾" D. Shipping Weight 6 lbs.

Price $179.50 inc. tax.

CLEARANCE SALE OF ELECTRONIC EQUIPMENT AND COMPONENTS

Receivers, transceivers, ex-Army, and citizens band transmitters, test equipment, oscilloscopes, signal generators, multimeters, chassis racks, panels, computer parts and boards, power transformers up to 6.6 kv., valves, transistors, potentiometers, etc., speakers, amplifiers, cables—hook-up and co-axial 50 and 70 ohms, multi-core up to 50 core—panel meters, AVO meters, valve testers and all types of electronic components.

7,000 sq. ft. of electronic gear, plenty of parking—come and inspect. Open 10-5 p.m. week days, 9.30-12 Saturday morning.

Wanted to buy: Receivers, transceivers, electronic equipment and components. Top prices paid.

PRINTED CIRCUIT TAB POTS

Values available: 500 ohm, 1K, 2K, 5K, 10K, 25K, 50K, 100K, 250K, 500K ohms, 1 and 2 megohms. Type "A"

Price 32 Cents each

HAM RADIO

(DISPOSAL BRANCH)

104 Highett St., Richmond, Vic., 3121

Phone 42-8136

MULTIMETERS

MODEL 200-H — Price $12.50

20,000 ohms per volt d.c., 10,000 ohms per volt a.c.

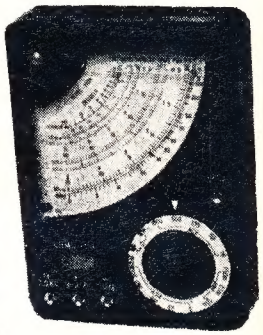

Specifications:
D.C. volts: 0-5, 25, 50, 250, 500, 2500.
A.C. volts: 0-10, 50, 100, 500, 1000.
D.C. current: 0-50 uA.; 25, 250 mA.
Resistance: 0-60,000 ohms; 0-6 meg.
Capacity: 0.01 - 0.3 uF. (at A.C. 5v.); 0.0001-0.01 uF. (at A.C. 250v.).
Decibel: Minus 20 db., plus 22 db.
Output range: 0-10, 50, 100, 500, 1000.
Battery used: UM3 1.5v., 1-piece.
Dimensions: 3¼ x 4½ x 1⅛ inch.
With internal battery, leads, prods.

MODEL AS-100D/P — Price $34.50

High 100,000 ohm/volt sensitivity on DC. Mirror scale, protected movement.
AC volts: 6, 30, 120, 300, 600, 1200 (10K o.p.v.). DC volts: 3, 12, 60, 120, 300, 600, 1200 (100,000 o.p.v.). DC current: 12 uA., 6 mA., 60 mA., 300 mA., 12 amps. Resistance (ohms): 2K, 200K, 20M, 200M. dB. scale: minus 20 to plus 63 dB. Aud. output (volts AC): 6, 30, 120, 300, 500 1200. Battery: internal. Approx. size: 7½ x 5½ x 2¾ inches.

MODEL OL-64D — Price $19.75

20,000 ohms per volt. DC volts: 0.025, 1, 10, 50, 250, 500, 1000 (at 20K o.p.v.), 5000 (at 10K o.p.v.). AC volts: 10, 50, 250, 1000 (at 8K o.p.v.). DC current: 50 uA., 1 mA., 50 mA., 500 mA., 10 amps. Resistance (ohms): 4K, 400K, 4M, 40 megohms. dB scale: minus 20 to plus 36 dB. Capacitance: 250 pF. to 0.02 uF. Inductance: 0-5000 Henries. Size: 5¾ x 4¼ x 1¾ inches.

MODEL C1000 — Price $6.95

This is the ideal low-cost pocket meter. AC volts: 10, 50, 250, 1000 (1000 o.p.v.). DC volts: 10, 50, 250, 1000 (1000 o.p.v.). DC current: 1 mA., 100 mA. Resistance (ohms): 150K. dB. scale: minus 10 to plus 22 dB. Dimensions: 4¾ x 3¼ x 1¼ inches.

MODEL CT-500/P — Price $16.75

Popular, medium-size, mirror scale, over-loaded protected. AC volts: 10, 50, 250, 500, 1000 (10K o.p.v.). DC volts: 2.5, 10, 50, 250, 500, 5000. DC current: 50 uA., 5 mA., 50 mA., 500 mA. Resistance (ohms): 12K, 120K, 1.2M, 12M. dB. scale: minus 20 to plus 62 dB. Approx. size: 5½ x 3½ x 1¾ inches.

MODEL A-10/P — Price $55.00

Giant 6½ inch meter. In-built signal injector, overload protected.
AC volts: 2.5, 10, 50, 250, 500, 1000 (10K o.p.v.). DC volts: 0.5, 2.5, 10, 50, 250, 500, 1000 (3K o.p.v.), 5000 (10K o.p.v.). DC current: 50 uA., 1 mA., 50 mA., 250 mA., 1 amp., 10 amps. AC current: 1 amp., 10 amps. Resistance (ohms): 10K, 100K, 1M, 100M. dB. scale: minus 20 to plus 62 dB. Signal injector: Blocking oscillator circuit with a 2SA102 transistor. Approx. size: 6½ x 7¼ x 3¾ inches.

HAM RADIO SUPPLIERS

323 ELIZABETH STREET, MELBOURNE, VIC., 3000

Phones: 67-7329, 67-4286 All Mail to be addressed to above address

Our Disposals Store at 104 HIGHETT ST., RICHMOND (Phone 42-8136) is open Mondays to Fridays, 10.30 a.m. to 5.0 p.m., and on Saturdays to midday.

We sell and recommend Leader Test Equipment, Pioneer Stereo Equipment and Speakers, Hitachi Radio Valves and Transistor Radios, Kew Brand Meters, A. & R. Transformers and Transistor Power Supplies, Ducon Condensers, Welwyn Resistors, etc

amateur radio

JOURNAL OF THE WIRELESS INSTITUTE OF AUSTRALIA. FOUNDED 1910

JULY, 1973
Vol. 41, No. 7

Published monthly, as the official journal by the Wireless Institute of Australia. Reg. Office: Above 474 Toorak Rd., Toorak, Vic., 3142.

Editor:
Bill Roper VK3ARZ

Assistant Editor:
Bruce Bathols VK3ASE

Technical Editor:
Bill Rice VK3ABP

Publications Committee:
John Adcock VK3ACA
Rodney Champness VK3UG
Syd Clark VK3ASC
Bob Dorin VK3ZU
Ron Fisher VK3OM
Ken Gillespie VK3GK
Neil Osborne VK3YEI
Peter Wolfenden VK3ZPA

Contributing Editors:
Deane Blackman VK3TX
Peter Brown VK4PJ
Don Grantley
Eric Jamieson VK5LP
Geoff Wilson VK3AMK

Drafting Assistants:
Andrew Davis VK1DA
Gordon Row L30187

Business Manager:
Peter B. Dodd VK3CIF

Enquiries and material to:
The Editor,
P.O. Box 2611 W, Melbourne, 3001.
Phone: (03) 67 8201 (ext. 38).
AH (03) 232 9492.
Copy is required by the **third of each month.** Acknowledgment may not be made unless specially requested. All important items should be sent by certified mail.
The Editor reserves the right to edit all material, including Letters to the Editor and Hamads, and reserves the right to refuse acceptance of any material, without specifying any reason.

Advertising:
Advertising material should be sent direct to **P.O. Box 150, Toorak, Vic., 3142,** by the **25th of the second month preceding publication.**
Hamads should be sent direct to **P.O. Box 150, Toorak, Vic., 3142,** by the **3rd of the month preceding publication.**

Printers:
Research Publications Pty., Ltd.,
418 Canterbury Rd., Surrey Hills., Vic.
Phone 836 1311.

CONTENTS

TECHNICAL—

Commercial Kinks 14
Digital Electronic Keyers 8
Fixed Capacitors—Part Two continued 7
Modification to the R390A/URR—Part One 12
Newcomers Notebook 15
Pre-mixing with a 5 MHz Crystal Filter 6
The Unsuccessful Ham 5

DEPARTMENTS—

Around the Trade 19
Key Section 20
Letters to Editor 20
New Products 19
Project Australis 15
QSP 2
VHF UHF an Expanding World 17
You and DX 17
20 Years Ago 19

GENERAL—

Australian Amateur Radio - and history 19
Customs Import Duties on Transceivers 16
How to Succeed in Electronics (by studying legs) 3
Novice Licence Letter 15
16th Jamboree-on-the-Air 20

CONTESTS & AWARDS—

Awards Column 16
Contests—Remembrance Day Contest 1973 18

FRONT COVER:
David Wardlaw, VK3ADW, newly elected President of the Wireless Institute of Australia. David has been a member of the Institute since 1947, and was first licensed in 1948. He served as the VK3 Federal Councillor during 1956-57-58, and was VK3 Divisional President from 1959 until 1963. From 1963 to 1965 David was overseas and operated with the calls VE3CAY and G3RYW. Since 1967 he has been a member of the Federal Executive.

Photo: Bob Dorin, VK3ZU

QSP

AS I take the office of the Federal President, my mind goes back to my introduction to amateur radio 28 years ago. The days when the bands were just being opened for use after "WW2".

I am reminded of the great changes that have taken place since then. At the 1948 Atlantic City I.T.U. Conference, the amateurs obtained significant recognition. The term "Amateur Services" was written into the International Radio Regulations.

In more recent times (at the W.A.R.C. Space Conference of the I.T.U. held in Geneva in 1971), the I.A.R.U. representatives were able to obtain privileges for the amateur service. These would not have eventuated had the I.A.R.U. not been present, observing and lobbying, as representatives of a recognised service.

Regardless of how kindly disposed official government delegations may be towards amateur radio, it is quite understandable that they may not realise all the implications made by non-amateur aligned countries. The I.A.R.U. delegates were able to correct some apprehension in delegations whose contact with amateurs was either un-informed or unfortunate (mainly due to indiscrete expatriate operators).

It is now sixty years since the formation of the Wireless Institute of Australia and the time when it was possible for one man to comprehend most of what was known about radio.

In the early days all amateurs had basically the same technical interests and modes of operation. However, in common with all other scientific disciplines, the rate of expansion of knowledge in electronics has been explosive.

Today's amateurs have a tremendous variety of interests around a central theme.

Often the interests of specialised groups impinge on the interests of other amateurs.

Equitable arrangements have to be reached which are in the best interests of everyone. Not to the advantage or detriment of any one section.

This is essential in order that the maximum fulfillment and enjoyment of the hobby may be achieved by all.

David Wardlaw, VK3ADW,
President.

"A.R." — your magazine

After considerable discussion and investigation, "A.R." changed to the offset method of printing with the April issue. This has resulted in savings in the cost of production as well as increasing flexibility in the type of material printed. An encouraging number of favourable comments have been received about the new style magazine.

However, the changeover has not been without its problems. Some anticipated, some completely unexpected.

Gradually we are overcoming these problems.

You will notice that this issue has arrived in your letterbox a lot earlier than the past few issues, and that with larger print, more line spacing and the use of different type style when fine type is used, it is easier to read.

An enormous amount of volunteer time and effort is being expended by the Publications Committee to produce for you, the members of the Institute, the best possible magazine at least cost.

We would like some assistance.

Much of the content of "A.R." depends upon articles submitted by contributors. We are very short of such articles at the moment.

We need short and long articles, hints and kinks, complete equipment descriptions and circuit details of single stages, practical and construction and theoretical articles, HF, VHF, and UHF articles, simple beginners and state-of-the-art articles, and so on. Anything connected with radio communication. Humerous, historical, travel, events.

If you are hesitant about your ability to produce suitable material, we can assist you. Write and ask.

At this time we cannot pay, but awards are made each year for the best articles published.

Photographs are needed for the front cover, the pictorial pages and for interest between articles and standard features throughout the magazine. Glossy, high contrast photos, printed a little on the light side, preferably 10" x 8", are preferred, but we will consider everything submitted.

I look forward to your contributions and support to your magazine.

Bill Roper, VK3ARZ
Editor, "A.R."

IARU

By May 1973, the International Amateur Radio Union could count 86 member countries. 13 countries in Region 3 are listed as members, these being Australia and of course, New Zealand, Japan, Malaysia, Singapore, Hong Kong, Philippines and Western Samoa, India, Ceylon, Burma, Thailand and Korea. Various possessions would come under U.S.A. and U.K. umbrellas. The ARRL is the IARU Headquarters Society.

Q CODE

"QLF" — Would you mind sending with your left foot for a while?
Answer — I am already sending with my left foot.
(ARNS Bulletin)

WHAT OTHERS SAY

A USA magazine which includes reviews on various amateur radio journals has this to say about "Amateur Radio" —

"Amateur Radio, December, runs an excellent article on an exhaustive test of directive antennas, commonly used by amateurs. Read this if you can possibly lay your paws on the club's copy! Part 2 on filters also is good. There's very good advice on learning the International Morse Code too."

SILVER JUBILEE

Congratulations to the Geelong Amateur Radio-TV Club. Formed at an inaugural meeting on 7th June 1948, the club has grown from the 14 members at that meeting, many of them being still active.

THE WELL-ROUNDED AMATEUR

What is a well rounded amateur? A well rounded amateur is an operator who does not let one narrow facet of amateur radio monopolize his entire talents and efforts at the expense of other interests both within and without amateur radio. Unfortunately, the well-rounded amateur is becoming more and more rare in f.m. circles. Just talking day in and day out, or just building, or just anything that is one single effort tends to warp one's opinion of other facets of amateur radio. CQ, May '73.

Q CODE

"QXX" — Do you know anyone who will lend me the money for a KWM-2 until I get this bankruptcy affair fixed up?
(ARNS Bulletin)

(Continued on page 9)

how to succeed in electronics

(by studying legs)

BILL CURRIE *VK3AWC

Since the writer was bitten by the radio bug as a school boy, vast strides have been made in the fields of electronics and communications.

Where once regenerative receivers and honeycomb coils were the order of the day, we now have multi-legged intergrated circuit phase locked loops — orbitting communication satellites, and digital readout multiband multimode solid state transceivers.

In endeavouring to keep abreast of the "state of the art" I have amassed and absorbed vast amounts of literature in the shape of magazines, manuals, and data sheets. Being of a gullible and optimistic nature, the reading of this has left me with an uncontrollable urge to try out each and every new device that appears on the market. This has resulted in—

1. Isolated cases where the device under test actually functioned for a short time as stated in the data sheet.
2. A fair sized pile of smouldering defunct devices.
3. A growing awareness that the more sophisticated the device, the less is the effort needed to render it totally useless, and the less spectacular is its demise.

The days of the red hot anodes and sputtering arcs that heralded the departure of earlier devices, have gone. I once spoke to an old timer who had been so fascinated by the fireworks display of an overloaded 866 that he could not bring himself to switch it off.

No more do we get a "run for our money" when we accidentally blast into oblivion the latest solid state wonder. The products of today's electronic laboratories whilst each containing enough circuitry to keep a conscientious draughtsman busy for some weeks, can be disintegrated within microseconds without uttering the slightest squeak of protest.

Here may be a good opportunity to lodge a plea with the designers of tomorrow's electronic marvels, to build into each device a warning system that will emit a squeal and/or a puff of smoke when the end is in sight. Analysing the results of many years experimenting I have reached the following conclusions that most devices were destroyed because:

1. They were wired in upside down.
2. They were wired in back to front.
3. The leads were transposed.
4. I thought pin 4 went to positive (?).

It was reasoned that the less connections (legs) a device has, the less chance it has of being wired incorrectly.

A diode has two legs, and so has a 50 per cent chance of being wired into a circuit correctly.

A transistor has three legs but can be wired up six different ways (try it) and therefore has only a 16-2/3 per cent chance of being wired correctly.

A further hazard appears when multi-legged devices are used. I recall wiring into a circuit, by mistake, a small spider which incidentally gave better results than a Fairchild U A 7 0 9 C. This probably was no fault of Fairchild's but was possibly due to the type of circuit used, or the activity of the spider, after being subjected to eight "blobs" of molten 60/40 solder.

Feeling a need for guidance in future experiments, it was decided to obtain a computer analysis of the problem. The relevant information was fed to the nearest computer (teenage student daughter) and the following readout obtained in the form of a probability curve.

After studying the probability curve for some weeks it was decided to confine all experiments to one legged devices. This resulted in almost 100% success. However it became evident that one legged devices were not overabundant. After having tried:

1. Every single earth connection within one mile of the shack.
2. Every single fed antenna ever invented.
3. "Peg Leg Pete".

I looked for further fields to conquer. I am at present working my way through the diode circuits handbook, and might add that results have been as predicted.

Does anyone want to buy one half of my entire stock of diodes. (Still slightly warm). Also for sale — one spider to 5 size (cold).

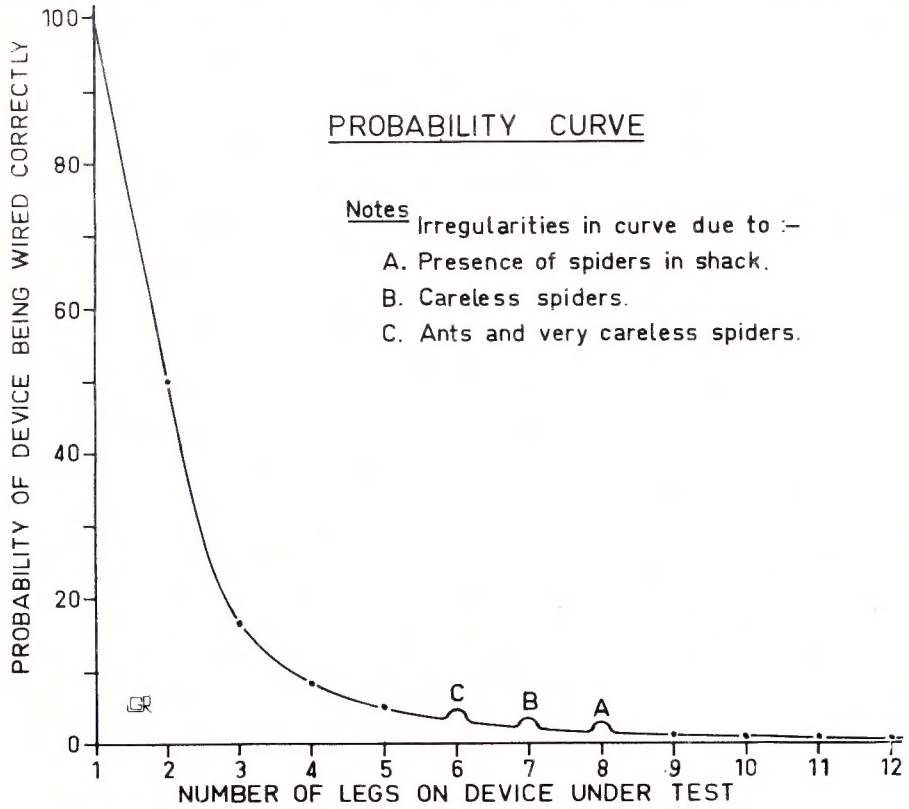

*1 Dowling Avenue, Seymour, Vic., 3660.

"WILLIS" AIR-WOUND INDUCTANCES

Take the hard work out of Coil Winding, use — "WILLIS" AIR-WOUND INDUCTANCES

No.	Dia. Inch	Turns per Inch	L'gth Inch	B. & W. Equiv.	Price
1-08	1/2	8	3	No. 3002	75c
1-16	1/2	16	3	No. 3002	75c
2-08	5/8	8	3	No. 3006	88c
2-16	5/8	16	3	No. 3007	88c
3-08	3/4	8	3	No. 3010	$1.06
3-16	3/4	16	3	No. 3011	$1.06
4-08	1	8	3	No. 3014	$1.19
0-16	1	16	3	No. 3015	$1.19
5-08	1 1/4	8	4	No. 3018	$1.32
5-16	1 1/4	16	4	No. 3019	$1.32
8-10	2	10	4	No. 3907	$1.91

Special Antenna All-Band Tuner Inductance
(equivalent to B. & W. No. 3907 7 inch)
7" length, 2" diam., 10 turns/inch,
Price $3.30

References: A.R.R.L. Handbook, 1961; "QST," March, 1959; "Amateur Radio," Dec. 1959.

WILLIAM WILLIS & CO.
PTY. LTD.
Manufacturers and Importers
77 CANTERBURY RD., CANTERBURY VIC, 3126 Phone 836-0707

ZEPHYR PRODUCTS PTY. LTD., 70 BATESFORD ROAD, CHADSTONE, VIC., 3148. Phone 56-7231

C.G.S

TYPE C MINIATURE VITREOUS ENAMELLED POWER WIREWOUND RESISTORS

Approved to BS 9114 – N002 style 2E–56

SPECIFICATIONS

The 'C' Series of miniature wirewound, vitreous enamelled resistors has been designed to meet the requirements of Specification BS 9114 - N002, and full Qualification Approval has been granted. A Test Report Summary is available on request; this report shows that many of the performance levels are in fact much higher than the specification acceptance levels.

The use of specially selected materials, combined with the application of exacting quality control throughout all stages of production ensures the consistent achievement of a very high standard of reliability.

ELECTRICAL SPECIFICATION

Tolerance: ±5% is standard on values of 1Ω and above and ±10% between 0.1Ω and 1.0Ω. For non standard values and tolerances please consult the factory.

Resistance values: C Series resistors are available with the preferred ohmic values of the E24 Series within the ranges shown in Table 1.

Temperature coefficient: Typically less than 100 ppm/°C and never exceeding 200 ppm/°C over the category temperature range –55°C to +200°C

MATERIALS

Core: High purity steatite ceramic. Chemically inert, capable of withstanding severe thermal shock and impervious to moisture. Ground to close tolerance finish to give maximum contact with wire element for rapid heat transfer.

Resistance Element: High quality nickel-chrome or nickel-copper alloy depending on resistance value; wound at minimum tension.

End Caps: Formed to close tolerances from a special nickel-iron alloy chosen for its consistent welding properties and glass sealing characteristics.

Leads: Solder coated nickel A.

Uncoated leads can be supplied for welding.

Specify – 'weldable leads'.

Preformed and cropped leads can also be supplied on request.

Coating: Humidity proof vitreous enamel with carefully controlled expansion matched to the materials of the resistor.

TABLE 1

C.G.S.				BS 9114 - N002							STYLE CROSS REFERENCE		
Style	Maximum wattage rating @ 20°C	Resistance Range Ω		BS 9114 - N002 Style	Maximum wattage rating @ 70°C	Approved Resistance Range Ω		Critical Resistance Ω	Limiting Element Voltage. Volts		DEF. 5111-1 Style	DEF 5115-2 Style	G.P.O. Style
		min.	max.			min.	max.		Normal	Low Air Pressure			
C3A	3	0.1	10K	2E-56-2.5	2.5	1	4.7K	3.9K	100	70	RWV3J	RFH3-2.5	P.O.35
C7	7	0.1	27K	2E-56-6	6	1	15K	6.8K	200	140	RWV4J	RFH3-6	P.O.40
C10	10	0.1	68K	2E-56-9	9	1	68K	27K	500	350	RWV4K	RFH3-9	P.O.36
C14	14	0.2	120K	2E-56-12	12	1	100K	47K	750	530	RWV4L	RFH3-12	–

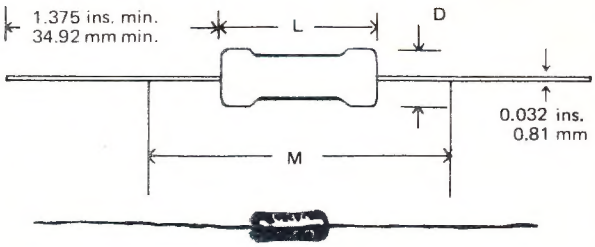

TABLE 2

Style	Length L		Diam. D		Measuring Distance M		Approx. Weight
	max. in.	max. mm.	max. in.	max. mm.	±0.062 in.	±1.59 mm.	grammes
C3A	.499	12.7	0.220	5.6	1.250	31.8	1.0
C7	.874	22.2	0.315	8.0	1.625	41.3	2.0
C10	1.499	38.1	0.315	8.0	2.250	57.2	3.5
C14	2.106	53.5	0.315	8.0	2.875	73.0	5.0

Note: M = resistance measuring points distance – below 10Ω only.

the unsuccessful ham

CHRIS de COMBE*—VK5NQ—G4AWL

Nearly everyone who writes in an Amateur Radio Magazine tells of some successful venture or equipment design. I thought it was about time the true story was told about all the failures that make amateur radio so much "fun"?

I am interested in QRP operation using morse code. The main reason being, I figured that with QRP operation less people would hear my poor morse. Having an Eddystone EC10 MK II receiver I decided to build a matching transistor transmitter. For QRP operation a VFO is essential, but with the lack of bandspread on the EC10 and the fear of frequency instability a crystal controlled oscillator was settled on.

The frequency chosen for operation was 7 MHz. I should put down a reason, but I can't think of a good one. The oscillator was one of my successes, the second circuit I tried worked. With this success gone to my head I pressed on to the class A buffer. Once again it worked. Well I thought the 100 mA drawn by the stage a bit high at the time, but I will come to that later.

With head swelling I pressed on to the P.A. stage which consisted of three BFY51's in parallel for a power of about 6 watts.

Well I got as far as tuning the slug in the driver collector when the fuse blew. Disaster had struck — I had committed a fundamental error of over driving a transistor stage. One of the BFY51's had gone short circuit.

MORAL 1: DON'T OVERDRIVE TRANSISTOR CIRCUITS.

*C/o P. O. Box 38, Woomera, 5270.

By removing the slug in the driver tuned circuit and tuning the circuit with a variable capacitor the drive was at a reasonable level and with two transistors in the P.A. I had a QRP transmitter running about 4 watts input.

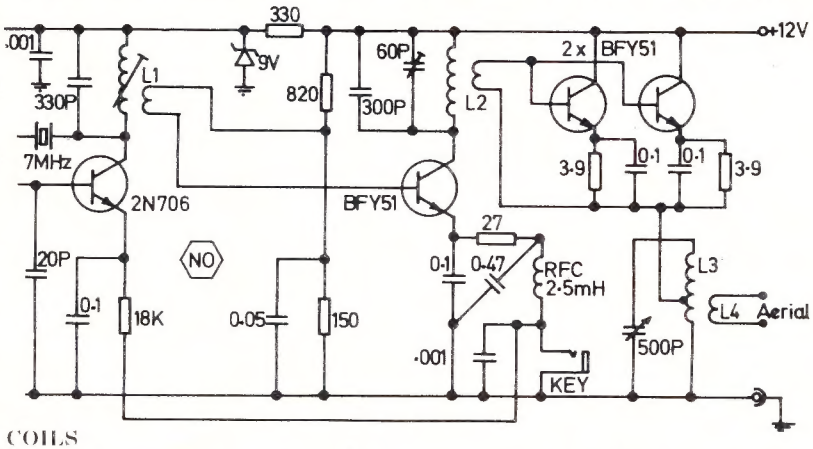

COILS

L1 15T primary 4T secondary ¼" former with core.

L2 15T primary 4T secondary ¼" former less core.

L3 15T tap at 7 turns ⅜" diam. former.

L4 5T wound over earth end of L3.

All coils wound with 26 BS enamelled wire.

The transmitter was put on the air and after only half an of hour of sending CQ VK5DW heard me. I was so excited I could hardly operate the key, but an enjoyable QSO followed. You might well say now that it all ended well, but I committed sin number 2 which is to touch a circuit when it is working well. The 100 mA of the driver had been nagging in the back of my mind and a close inspection of the driver circuit showed the fault. "You colour blind twit", I cried as I spied a 2.7 Ohm resistor where a 27 Ohm should be. Out came a soldering iron and the resistor was changed. The power was switched on again and then, oh no, the fuse blew again. My first trouble again and I was now left with one P.A. transistor.

It hardly seemed worth having one transistor in the P.A. and so I turned the driver into a class C stage and it ran the great power of one and a half watts input.

I put the transmitter on the air again and after several unsuccessful attempts to call several amateurs calling CQ, I called CQ and was rewarded by VK5DW answering me again. I had a transistor transmitter which worked and had a lid glued on with Araldite.

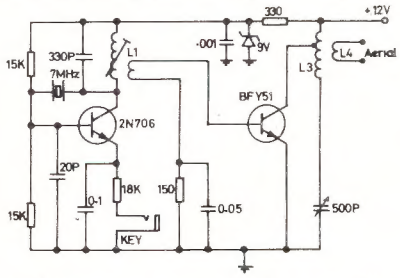

Unfortunately curiosity killed the cat and I now have no transmitter. I decided I could improve the transmitter, the lid was hacked off and the circuit modified. The P.A. stage burst into self oscillation and it destroyed itself. Needless to say it failed to work after that.

I was so fed up with transistors that I dug in the junk box and out came a 5763 and a 6L6. A two stage valve transmitter was built with a power input of 20 watts. It worked first time, good old valves, but still I was destined for failure because before I could put the transmitter on the air the oscillator stopped oscillating.

The fault was traced to my newly purchased crystal.

This leads me to MORAL 3: Don't run your crystal oscillators at high power, and can anyone tell me where to buy a good commercial transceiver?

After 36 Years

for

ACCURACY

STABILITY

ACTIVITY

OUTPUT

BRIGHT STAR CRYSTALS

are still on top

Prompt Delivery Guaranteed
All Types of Mountings

Such as HC6/U (style D) ... HC18/U (style J) ... HC25/U (style K) ... etc. ...
Frequency range up to 140MC on 5th overtone.

Our increased production now enables us to offer Special Discounts from 10%. Let us quote you for all your Crystal requirements. Our easy-to-read Price List is now available.

35 EILEEN ROAD, CLAYTON, VIC. 3168. Ph. 546-5076 (Area code 03).
Sydney Agent: PARIS RADIO ELECTRONICS, 7a Burton Street, Darlinghurst, N.S.W. 2010. Ph. 31 3273.
Perth Agent: W. J. MONCRIEFF PTY. LTD., 176 Wittenoom Street, East Perth, 6000. Ph. 25 5722, 25 5902.
Brisbane Agent: FRED HOE & SONS PTY. LTD., 246 Evans Road, Salisbury North, 4107. Ph. 47 4311.
Adelaide Agent: ROGERS ELECTRONICS, P.O. Box 3, Modbury North, S.A. 5092. Ph. 54 3296.

pre mixing with a 5 MHz crystal filter

JONATHAN KITCHIN *VK6TU

This article, which might be subtitled "Where did the birdies come from?" is a rather amusing account of a situation which most home-constructors of SSB receivers will recognise. The author has not suggested any solution to the problem, but a footnote by the Technical Editor may be of some help to 6TU and others.

I had built a transceiver operating on 80 and 20 metres using a Yaesu 5174 KHz crystal filter and 9 MHz VF0 (8674 to 9176 KHz). So how to get on 40? Switch the VF0 to 12 MHz, or pre-mix? The VF0 was built-in, with no room left, so it had to be pre-mix. There are a couple of commercial rigs which do this so I guessed it must be OK!

After a little figure work I reckoned I needed a crystal on 21144 KHz. 21144 minus VF0 8970 = 12174. 12174 minus filter 5174 = 7000. This would give 7 MHz at the same VF0 setting as for 3.8 MHz (actually 8974). The tuning would be reversed, so 7.2 MHz would correspond to 3.6 MHz (VF0 on 8774).

RESULTS

The above calculations suggested all would be OK, but when tried out I found a terrible birdie near 7.2 MHz! This is due to VF0 third harmonic (3x8772 = 26316) minus 21144 = 5172. There were a couple of minor ones about 7000 and 7150 KHz but out of the band so all was well. Actually this birdie is useful for dial-setting. It just cannot be overlooked!

On 21 MHz the problem of how to operate was overcome in a similar manner. Crystal on 25 MHz, subtract the VF0 to give 16 MHz, and add the 5 MHz SSB to come out on 21 MHz. But birdies are all over the place! Several major, and many more minor ones. The major ones are:

2 x 25000 - 5 x 8965 = 5173 on 21207
3 x 25000 - 8 x 8728 = 5173 on 21444
9 x 8908 - 3 x 25000 = 5173 on 21264
12 x 8764 - 4 x 25000 = 5173 on 21408

Among the minor ones are two close together near 21310, and others near 21050, 21110, 21170, 21225 and 21385. But it is quite workable. Ten metres has not been tried in the homebrew rig, but a little calculation shows that a 32.5 MHz pre-mix crystal will cause major birdies on 28563, 28661 and 28756 KHz.

OUR TECHNICAL EDITOR COMMENTS AS FOLLOWS

VK6TU has encountered the problem which plagues all of us who attempt to build heterodyne VFO's, dual conversion receivers, and similar systems involving more than one oscillator. If harmonics of the oscillator frequencies were not present there would be no problem. Unfortunately, no matter how cleanly sinusoidal the oscillator waveforms may be, most practical mixers will distort them, thus generating harmonics. This is particularly true of diode and bi-polar transistor mixers, where mixing depends on the same non-linearity which produces the harmonics. Balanced mixers are little better. They may cancel out one of the input frequencies and perhaps its even harmonics, but at the best, imperfectly.

The author does not indicate whether his transceiver uses valves or transistors, but in either case, if possible, the oscillators should be separated by shielding and filtering so that harmonics of both oscillators will not appear together in any part of the system. Obviously this cannot be achieved in a heterodyne (i.e. pre-mix type) VF0, since both oscillators feed into one mixer.

This is therefore a disadvantage of the pre-mixing system as compared with dual-conversion, where the oscillators feed separate mixers and steps can be taken to keep their harmonics confined to separate areas.

Fortunately, modern solid-state devices have provided an answer to the oscillator harmonic problem. Not only can FET oscillators be constructed without difficulty to have very low harmonic output, but dual-gate FET's have been found far superior to other types of mixers. This is because the absence of forward-biased junctions allows the mixer to present a constant linear impedance to the oscillator, thus producing no distortion of its waveform.

POSTSCRIPT

The foregoing discussion was almost on its way to the printers when a further contribution arrived from VK6TU, in which he produced an alternative to his original scheme. This is to limit the VF0 tuning range to 200 KHz (from 9.8 to 10 MHz). By subtracting the filter frequency from the pre-mixer output on 80 and 40 metres, and adding them for the higher bands, the correct tuning sense is achieved on all bands (i.e. no reverse tuning on some) yet the one carrier crystal only is required for LSB on 80 and 40 and USB on the higher bands. Either 5 or 9 MHz filters can be used, suggested frequencies being—

Band

5.172 MHz filter

	Xtal	Pre-mix out
3.5- 3.7	18.672	8.672- 8.872
7.0- 7.2	22.172	12.172-12.372
14.0-14.2	18.828	8.828- 9.028
14.2-14.4	19.028	9.028- 9.228
21.0-21.2	25.828	15.828-16.028
21.2-21.4	26.028	16.028-16.228
28.5-28.7	33.328	23.328-23.528

9 MHz filter

	Xtal	Pre-mix out
3.5- 3.7	22.5	12.5-12.7
7.0- 7.2	26.0	16.0-16.2
14.0-14.2	15.0	5.0- 5.2
14.2-14.4	15.2	5.2- 5.4
21.0-21.2	22.0	12.0-12.2
21.2-21.4	22.2	12.2-12.4
28.5-28.7	29.5	19.5-19.7

VK6TU claims, without actually trying it out, that this later scheme should give much less trouble with birdies. This may be so, due to the much more restricted tuning range, but this imposes its own penalty in requiring many more heterodyne crystals to cover the range, particularly on 10 metres. It may be that birdies from high order harmonics can still occur, nevertheless, but a complex computer programme might be needed to predict them? For the amatuer lacking such facilities the only course is to try the scheme in practice, with a strong recommendation to use dual-gate FET's for the mixers!

A TRIO OF HARD WORKING FEDERAL COUNCILLORS AT THE 1973 FEDERAL CONVENTION

Jim Lloyd, VK3CDR.

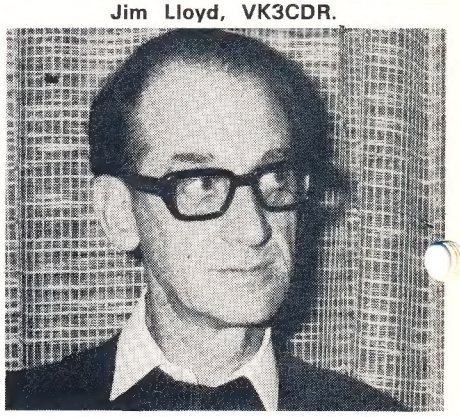

Laurie Blagbrough, VK4ZGL

Geoff Taylor, VK5TY

fixed capacitors

PART 2 Continued

C. A. CULLINAN *VK3AXU

Just in case someone feels like writing a vitrolic letter, in red ink, to the Editor on the basis that the great advantage of FM reception is its freedom from noise, it must be pointed out that some forms of interference may be in the form of Amplitude Modulation or Frequency Modulation or both combined and can cause considerable interference to FM as many Amateurs using FM on 144 MHz and above know only too well.

As this is being written the writer's TV set is suffering from TVI. In this case there are objectionable lines of dots across the screen and these lines crawl vertically as well. At the same time there is interference in the FM sound. This TVI will go off shortly when the car outside the house moves away and takes its radiating ignition system with it. At present the engine is idling.

"The main sources of disturbances on a car are the battery charging generator, and the ignition circuit. The former causes interference because of its commutator, and the latter because there are regular surges in both the high tension and the low tension circuits. The generator is satisfactorily suppressed by fitting a .5mf Suppressor capacitor capable of resisting the engine temperature, close to the engine frame, with the flexible lead connected to the unearthed brush of the generator. If ignition is obtained from a coil, the circuit may be suppressed in three places. A distributor suppressor, with a resistance of 10,000 to 15,000 ohms, is connected in the high tension lead as it enters the distributor — a spark plug suppressor of 5,000 to 10,000 ohms may be connected in the high tension lead very close to each plug (this is done normally after the distributor suppressor has been deemed not sufficient to suppress the particular noise).

"An 0.1 mfd capacitor completes the equipment when fitted so that its case is connected to the engine frame, and its flexible lead connected to the side of the coil not connected to the contact breaker.

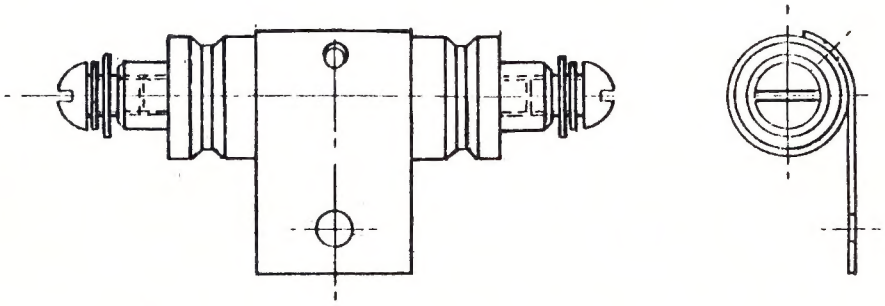

DUCON COAXIAL CAPACITORS

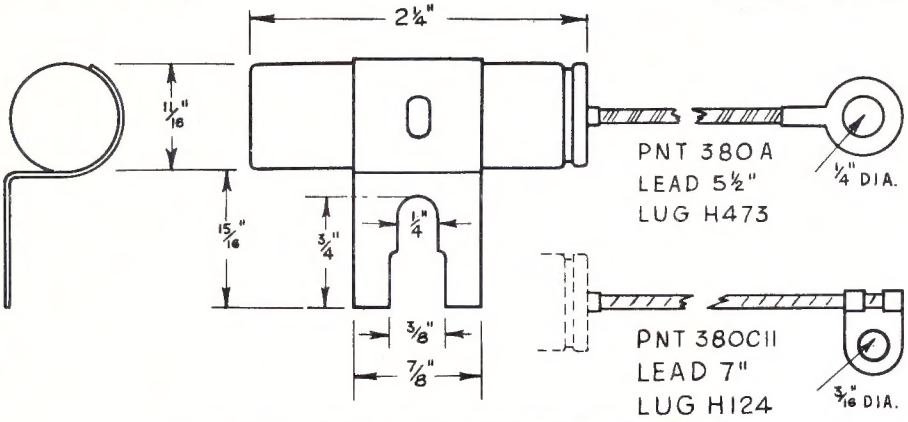

DUCON NOISE SUPPRESSOR CAPACITORS

"With magneto ignition the distributor suppressor is not fitted as the disturbance is not so pronounced, and the added resistance tends only to impair engine performance unless the magneto is exceptionally good. In this case the contact suppressor is fitted so that its case is at frame potential and its lead connected on to the lead as it leaves the magneto on its way to the ignition switch. "Modern cars do not use a distributor suppressor resistor, except in cases of extreme interference, but rely on carbon trace ignition leads instead, each lead being its own resistor. The resistance of a typical lead is 275 ohms per centimetre.

"This type of suppression is very effective at TV frequencies.

"Also modern cars are fitted with what are called 'Alternators' for battery charging. These 'Alternators' use built-in solid-state diodes instead of a commutator to derive DC output. Alternators' are three phase devices and the stator may be connected in either 'star' or 'delta'.

"Alternators' have two slip-rings and two carbon brushes to supply DC to the enciting rotor.

"Alternators' can be prolific generators of noise in car radio sets. For broadcast frequencies a capacitor of 0.5 mfds may not be large enough. 3.0 mfds is a typical value of capacitance.

"However at HF and VHF it may be necessary to take the DC output current through a co-axial capacitor.

"Any electrical contrivances on a car such as a horn, petrol pump, starter, heater fan motor, electrically operated radiator fan, etc., may need noise suppression. Usually an 0.5 mfd capacitor of the type to be fitted to a car generator will be effective, except in the case of an electric windscreen wiper where it may be necessary to connect a 25 mfd electrolytic capacitor across the motor. Additionally it may be desirable to connect a low resistance RF choke in series with the active lead. For HF and VHF a non-inductive capacitor may be needed and the lead to the suppression devices might have to be screened.

"In locating an aerial on a car it is advisable to keep it as far away as possible from the electrical devices.

"There are a great many other devices besides the automobile that create radio noise.

"One of the most prolific is the petrol engined lawn mower. It too can be suppressed along the lines described for cars.

"Where the interference is due to simple switching processes it is quite a common practice to connect a suppressor directly across the switch terminals. Such a suppressor may consist of a capacitor of 0.01 mfd in series with a resistor of 150 ohms."[78]

(To be continued.)

NORTH QUEENSLAND CONVENTION
DURING WEEKEND OF
21st and 22nd JULY, 1973,
at TOWNSVILLE
— Saturday —
Equipment Displays, Auctions, Technical Films, Bargain Corner, H.F. and V.H.F. Scrambles, Fox Hunts, Social on Saturday Night.
— Sunday —
Fox Hunt's etc., Games for both XYL's and Harmonics. Smorgasbord Lunch.
Further details from:
T.A.R.C., Box 964, Townsville, 4810, or W.I.A. QLD. Division News.

*6 Adrian St., Colac. 3250.

digital electronic keyers

L. H. VALE *VK5NO

Two solutions are provided here to the same problem, as developed by VK5NO over a period of some years. The earlier approach employed two general purpose operational amplifiers while more recently, use was made of digital integrated circuits.

DIGITAL KEYER

This Keyer (Figure 1) has character completing, correct dot/space and dot/dash ratios and was designed to be as simple and inexpensive as possible.

Two of the units have been made on tenth-inch-spaced matrix board to the approximate layout shown in Figure 2, although there is no need to use two separate pieces of board.

The monitor terminal goes approximately 5 volts negative on "key down". Loading on this terminal should not exceed 1 OK to earth (terminal 3). In units built here it keys a multivibrator driving a small speaker.

If you have room, it may be as well to increase the values of C3 and C4.

The relays used here had 12 volt coils, approximately 300 ohms resistance.

The value of C2 determines the speed range limits; C1 and C2 can be ceramic or polyester.

The following notes are applicable only when transistor keying is used, as shown in Figure 2:

(a) The value of RK must be such that the transmitter is cut off on "key up" whilst limiting the voltage between the key terminal (6) and earth (3) to less than 65 volts for the 2N3645 (find the value before connecting the Keyer).

(b) CK and DK are used for key click suppression and can be omitted if your transmitter is free of clicks without them. CK approximately .002 mfd, value found by listening, DK can be almost any diode.

(c) For transistor keying, C5, D9 and the relay can be omitted.

DIGITAL KEYER USING OPERATIONAL AMPLIFIERS

The circuit shown uses two inexpensive operational amplifier ICs and an output transistor to form a digital Keyer that gives equal mark/space ratio on dots regardless of speed setting, character completion, a wide speed range, and correct dot-dash ratio.

The output circuit shown is for Keying an FL100B transmitter but can be readily modified if required to suit other transmitters, or to drive a relay, as shown. The value of R22 must be such that the transmitter is cut off on "Key up" whilst limiting the voltage across the

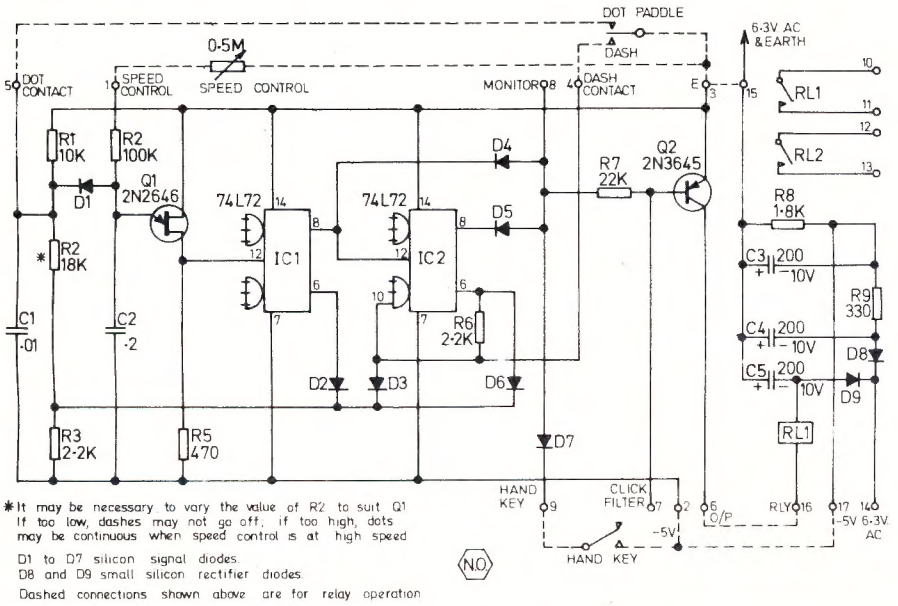

DIGITAL KEYER CIRCUIT DIAGRAM FIG. 1

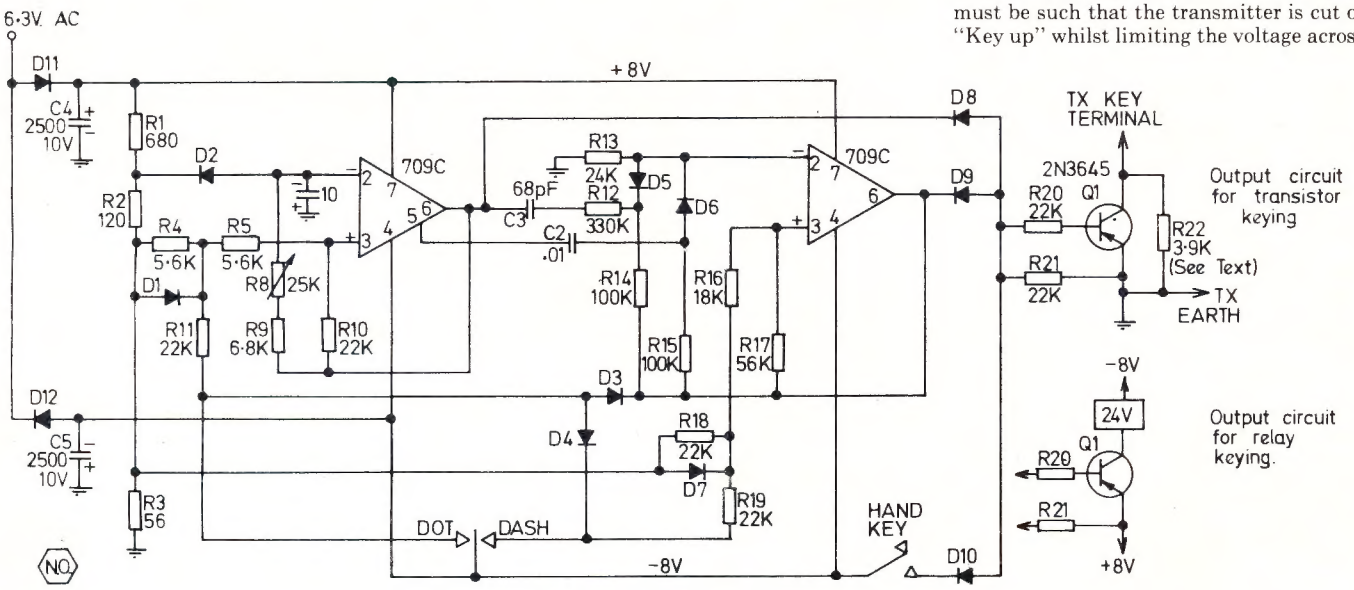

DIGITAL KEYER USING OPERATIONAL AMPLIFIERS

C/- Box 309, Fyshwick, A.C.T., 2609.

Key terminals to less than 65V for the 2N3645 (the value should be found before connecting the Keyer).

In the writer's Keyer an MC1437 dual op-amp is used but at present prices a pair of individual 709C's is very much cheaper and less bother to use. The diodes D1 to D10 can be small silicon diodes like OA200, AN914, etc., and D11 and D12 low p.i.v. rectifiers.

Two of these Keyers have now been operating satisfactorily for more than two years.

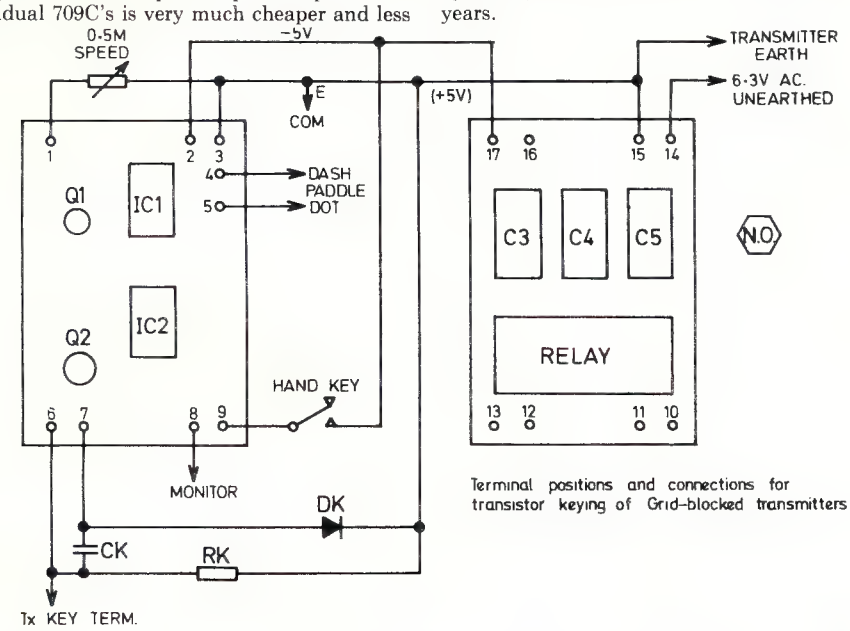

Terminal positions and connections for transistor keying of Grid-blocked transmitters

LAYOUT OF MATRIX BOARDS FIG. 2

For Reliable Connections

OTL

RESIN CORE SOLDERS

O. T. LEMPRIERE & CO. LIMITED

Head Office: 31-41 Bowden St., Alexandria, N.S.W., 2015 and at Melbourne, Brisbane, Adelaide, Perth, Newcastle

OTL/70

QSP

Continued from Page 2

I notice when some fellow dies, No matter what he's been
Some saintly chap, or one perhaps, who's life was stained with sin
His friends forget the bitter words, they spoke but yesterday
And now they think of a multitude of pretty things to say

Perhaps, when I am laid to rest, someone may bring to light
Some noble deed, or kindly act, long buried out of sight.
If it's all the same to you, my friends, Just give to me instead
A clear frequency while I'm living, and the QRM when I'm dead

(ARN's Bulletin)

SATELLITE DICTIONARY

Doppler shift, a hunt by a learner driver for the proper gear; a red chemise; movement of a dopple.

NORTH QUEENSLAND CONVENTION 1973

Peter Renton, VK4PV, writes that plans are being made for the Convention in Townsville on 21st/22nd July with high hopes that the newly-formed Mt. Isa, the Mackay and Cairns Clubs will join in also. As he says, it should prove to be a unique gathering of amateurs in that area.

INDONESIA

The archipelago covers a land area of 735,381 sq. miles of about 13,677 islands (6044 inhabited) and a population estimated for 1971 of 119,000,000; language — Bahasa Indonesia. Electricity only in main centres, 50H, 127 to 240V A.C., 2 pin European type sockets.

RADIO AMATEUR POPULATIONS

Break-In for April 1973 quotes 70% of the world's radio amateurs as being in USA and Japan — i.e. 425,000 out of 580,000 Then follows DL, G, LU, USSR, PY and VE each with 10 to 20 thousand Of the remainder, only 3000 are in Africa and half of these are in ZS. The question, "And how many ITU votes are there in Africa?", seems most pertinent.

TROUBLE-SHOOTING

The time will surely come when trouble-shooting a transceiver will consist of looking at a few LED's (light-emitting diodes) that are a part of the "go-no-go" system of each module in the set. It will work like this: Any module that is not functioning properly will be indicated as "no-go" by a LED. You need merely pull out the module, ship it to the factory and receive a new one CQ, May '73.

OSCAR-6

The largest-range QSO reported to date is K7BBO-SP2DX about 5,050 miles. The Satellite DX Achievement Award has had a total of 30 qualified applicants — KL7MF, JA1JRK and JA8PL – all have confirmed four continents. QST Apr '73.

UNUSUAL PROBLEMS

To put through an access road to the top of Mount Bellenden Ker, to establish a TV transmitter to serve the Cairns region and areas west of the Great Dividing Range, would have been too costly because of the tropical rain forest Instead a passenger ropeway rising nearly a mile high in ten stages, of which two are each nearly a mile long, was constructed to transport the people and equipment required to build the station. The press release, presumably put out by W. R. Carter and Associates the consulting engineers for the Commonwealth Department of Works, does not say how the nine large towers for the ropeway were transported.

ESSENTIAL BOOKS

AMATEUR RADIO SSB GUIDE. A complete guide to the understanding, operating and maintenance of SSB equipment. A$3 inc. post.

RADIO HANDBOOK. Latest impression. 974 pages. W. I. Orr 19th ed. A comprehensive communications handbook written especially for the radio amateur, electronics engineer and technician. Covers every aspect of amateur radio including latest designs and developments. A$15 plus A$1 towards carriage.

HANDBOOK OF BASIC ELECTRONIC EQUIPMENT. Gives specific details of the components and equipment used in Radio, Short-Wave Listening, Amateur Radio, TV, Tape Recording, Record Playing. Enables you to choose the best components and accessories and use them economically and safely. Illus. A$4 inc. post.

COSMIC RADIO WAVES. Start a new hobby—RADIO ASTRONOMY. This big book of 444 pages is an ideal handbook for the beginner and established enthusiast. Numerous photographs and illus. Pub. by Oxford University Press. A$6 inc post.

TRANSISTOR SUBST'TION HANDBOOK. Gives the substitutes for thousands of European, American and Japanese transistors. Where no substitute is available, shows how to select a replacement. Includes over 10,000 types. A$3 inc post.

PROBLEMS IN ELECTRONICS WITH SOLUTIONS. A must for the student, technician and electronics engineer. Contains 349 problems answers and how they were arrived at. Includes all aspects of electronics, amplifiers, power supplies, computers, aerials, waveguides, transmission lines. 307 pages. Ideal for anyone taking Amateur Radio Exams. A$2 post free.

THE MODERN DICTIONARY OF ELECTRONICS. Contains concise definitions of more than 18,000 terms in electronics, communications, micro-electrics, fibre optics, semi-conductors, computers, medical electronics. Fully illlus. Essential to any collection of electronics reference books. A$13 post free.

99 WAYS TO IMPROVE YOUR SHORTWAVE LISTENING. Essential to all amateurs and enthusiasts. A$4 inc. post.

HANDBOOK OF SATELLITES AND SPACE VEHICLES. A comprehensive working handbook that provides important data both tabular and graphical enabling space scientists technicians and telecomunication engineers to acquire a greater working knowledge of satellite and space vehicle design, launching orbiting etc. Includes a detailed coverage of COMMUNICATIONS IN SPACE. An imposing book of 457 pages. Published at A$18 but available to readers at the trade price of A$14 plus A$1 towards postage. Send cheque, international money order, registered cash to:

GERALD MYERS. Dept. AR. 18, SHAFTESBURY ST LEEDS LS12 3BT, YORKSHIRE ENGLAND.

Mr. J. M. Dixon of the Australian Broadcasting Control Board was the guest lecturer at the June general meeting of the Victorian Division. The topic was "The UHF FM Broadcasting Network". It was an extremely interesting and topical lecture, and a full report should appear in the next issue of 'A.R.'

The St. George Amateur Radio Society held a col
Civil Defence Headquarters, The Mall, South Hurs
Meeting on May 2, 1973. The meeting was well
visitors saw an excellent display of AL colour
colour videotape recorders and onto colour TV r
was excellent and a tribute to the amateur radio
co-ordinated the equipment used. Ian Mackenzie
stration to the people present and answered que
after the demonstration was over. The St. George A
first Wednesday of each month at the above a

The picture of VK3AUN's morse key might interest the home brewer. He writes that the simplicity of it fascinated him — some old motor points, a piece of pine board, a machine hacksaw blade. The blade at the fixed end was ground away until just stiff enough to maintain a central position. He finds it as light as a feather in use and hopes it may be helpful to others..

ld a colour TV demonstration at the
ith Hurstville at the Annual General
as well attended and members and
colour videotapes played through
ur TV monitors. The colour quality
radio operators who had built and
ckenzie (VK2ZIM) gave the demon-
red questions of a technical nature
George Amateur Radio Society meets
above address starting 7.30 p.m.

Pictured is a specimen of the ARRL'S new Satellite Award which is in colour—mainly yellow on a moire-effect dark background. The Satellite '1000' Award, as it is named, requires 1000 points for acquisition; 10 points for each new station contact, 50 points for a new country and 250 points for a new continent. QSL cards are required as proof of contacts on or after 15th December, 1972, the effective date of the Award. Apply to ARRL, Newington, Conn., U.S.A. 0611, for application form.

Several members of the Executive of the W.I.A., and the Federal Manager, listening intently as Bill Colborne, VK3BFN, details the results of his submissions regarding Customs Import Duties. (See page 16 of this issue). The listeners, from left to right, are Keith Roget VK3YQ, Peter Dodd, VK3CIF, David Wardlaw, VK3ADW, and Jack Martin, VK3TY.

modifications to the R390A/URR ... PART ONE

JOHN WEIR *VK3ZRV

Even such an impressive receiver as the R390A/URR leaves scope for improvements when some of the more stringent amateur needs are considered. Many of the improvements possible are to be found in this account of VK3ZRV's experience with these receivers.

Numerous ideas and suggestions prompted this article, and while it may have only passing interest to a lot of readers, a few may possess one of these receivers. It may provide food for thought when trying a few things on the station receiver. The ideas were as follows:

1. Is it possible to obtain better reception of SSB than could be obtained in the unmodified condition?
2. As there is a fair amount of AM, and FM on the bands (especially in the VHF region) as well as SSB, would it be possible to modify the receiver simply to enable it to demodulate all these modes?
3. Is the noise limiter effective on SSB or would the fitting of a noise blanker type of circuit be more effective?
4. Is the AGC in its present form effective enough for SSB?
5. Finally, there are some hints and manufacturer's modifications included which may be of value to some owners.

Looking at the receiver as a whole there are basically three models which are obtainable locally. They are R390/URR, R390A/URR, R391/URR, and closely akin to these is the R392/URR which I believe is rather a rare one (or two). The main difference between the models is in the IF region (both fixed and variable). The R390/URR and the R391/URR are identical circuit-wise and differ only in that the R391/URR has an added facility for autotune to some 8 preset channels. Both models have six stage 455 KHz IF's and the bandwidth is controlled by various degrees of coupling between primary and secondary windings of the IF transformers. Both models can be powered from 117V or 240V AC, 40-60 Hz but **BEWARE** of the 240V. I will explain more on this later in the article.

The R392/URR is a mobile version of the R390/URR with a few less refinements. It requires 20-28V DC only for both heaters and HT, and as well has only three IF bandwidths controlled by the same method as in the R390/URR. The R390A/URR exhibits its main difference in that its IF bandwidth is controlled by four mechanical filters, and it has NO autotune. The performance of all four models is identical when correctly aligned to makers specifications.

The models all exhibit linear tuning throughout their tuning range (500 KHz-32 MHz). This is accomplished by the movement of powdered iron cores in the RF and variable IF coils at a rate controlled by the mechanical arrangement of gears, shafts, and cams. This mechanical section is the heart of the receiver, and a note of warning here, DO NOT attempt any adjustments on this section unless you are fully conversant with the handbook or are able to follow it step by step, as I know a few people who took the challenge and lost!

I would be glad to try to answer any queries on all models except the R392/URR if a large S.A.E. is sent with your query to my QTH, or if you hear me on the air, as I personally have or have access to, handbooks of the models concerned.

Let's now have a look at what I have done in the way of modifications A quick look at the schematic will show in the IF/detector stages that both the detector and AGC diodes are half sections of double triodes strapped as diodes. (V506B for the detector and V509A for the AGC). If these are replaced by solid state devices it would mean that the equivalent to one valve can be removed. So far so good but before one valve can be removed, a small amount of rewiring has to be done. This I did using a IN60 for the detector and an OA202 for the AGC.

fig. 1. Don't at this time remove any filament wiring from V506.

Before going on with other changes there are a few modifications that may or may not be incorporated in the sets in your possession. I will list them as per their circuit reference number, their function, and their value (old and new).

1. Remove the connection between pin 2 and 7 of V201 (RF amp. 6DC6) and connect pin 7 to ground. This could be left till later as I intend to describe the replacement of V201 with a 6GM6 to lift the sensitivity.
2. C275 (5000 pF) which keeps the 150V Reg at RF ground is changed to 3300 pF (see circuit around 1st Xtal Osc).
3. C612 (68 pF) is added in parallel with R601 on the AF subchassis (grid of 1st AF amp. V601A).
4. C257 (47 pF) is added in parallel with C227 (.04 uF) cathode bypass for V201, 1st RF amp.

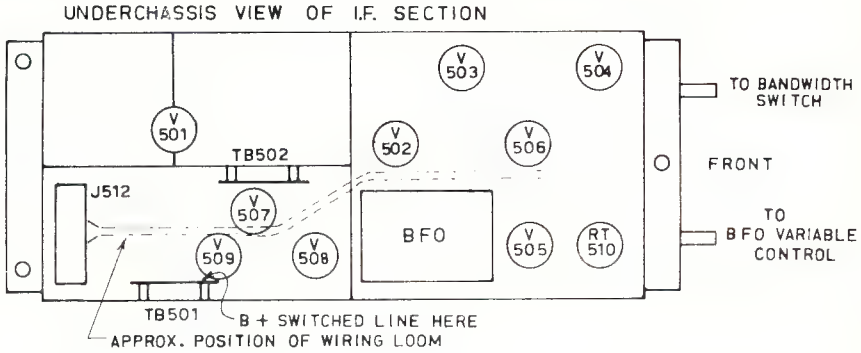

FIG. 1.

Looking at fig. 1 which is an under chassis view of the IF section of the receiver, note where the valves are positioned. V506B and V509A are now spare if you have fitted the diodes as mentioned. V506A is used as the AGC time constant valve and V509B is used as the IF cathode follower. It is now possible to change the function of V506A to the unused section of V509A. Having done this V506 as a whole is now redundant.

All the main wiring for the IF chassis comes from J512 to various parts of the chassis and so the existing wiring can be utilized to rewire V509A for the function of V506A. The wiring from V506A can, once identified, be pulled back through the loom from J512, cut to length and re-terminated on the respective pin numbers of V509A. A point to note here is to change one wire at a time, fitting new components where required or the salvaged ones if they are undamaged. A few standoff type of wiring tie points should be used to support the components (even the IN60 and the OA202). The only component to cause any concern may be R549 (82K), the plate load for the AGC time constant tube, which connects to the switched RF/IF B+ line. This line is available at TB501. It is the terminal closest to you on the right of TB501 when the chassis is viewed as shown in

5. ADD a series network of C256 (0.1 uF) and R235 (47 ohms) between terminal 1 of HR202 and ground. 6.3V AC is at this point and the network is used to suppress any transients caused by the operation of the thermostat in the XTAL oven.
6. C232-1 and C232-2 (each 2400 pF) located in Z201-1 and Z201-2 respectively, are changed to 1500 pF. These capacitors are used as a divider network to reduce the loading of Z201-1 and Z201-2 by the grid circuit of the 1st mixer V202. Realignment is necessary.
7. Grid suppressor E213 added between pin 9 of S204 front and test point E208, in the grid circuit of V201. The values of the inductor and the resistor (in parallel) are not known as the unit was fitted in my receiver and it is also encapsulated. (Sorry!)
8. R504 (1000 ohms) is changed to 560 ohms. It is the cathode resistor of the first IF amp V501 and raises slightly the gain of this stage to overcome aging of the valves and yet still maintain the overall required gain of the IF strip. (Preset in the alignment procedure by R519 IF gain adjust.)

As mentioned earlier there is a trap about

(continued on facing page).

*55 Shandon St., Mornington, Vic., 3931.

BELCOM LINER 2 Solid State 144 MHz SSB transceiver, 10 W PEP, 12V DC.VXO coverage 144.100 to 144.330 KHz, can be modified to any other part of the 2 Meter band with additional mixing crystals, complete with microphone and mobile bracket, incorporates many facilities as noise blanker, clarifier on reception, squelch, size 9"x3"x10" contains 27 transistors, 6 FET's, 1 I.C. and 44 diodes, all for $350

SWAN TV-2C 2 Meter transverter, 14 MHz input, 240 W PEP output on SSB, receiver noise figure less than 3 db with two FET rf stages and FET mixer, 5894-B transmitter output stage, to be powered externally from the supply of the driver-transceiver $450

SWAN VHF-150 2 Meter linear amplifier, 150 W input with only 2 Watt drive power, built-in AC supply, with input-output relays to by-pass linear on reception, optional Class C for FM & CW or Class B operation for SSB, uses an RCA twin-tetrode 5894-B $375

KEN PRODUCTS KP-202 2 Meter FM 2 Watt output hand-held transceivers, with provisions for 6 channels, crystals for 4 channels provided, 144.48 & 144.60 plus a choice of channels A, B, Repeaters 1 or 4 .....$150
Extra crystals $8 per channel for 2 crystals.

BARLOW WADLEY XCR-30 Mark II a truly portable crystal controlled communications receiver, using the Wadley loop principle as applied in the RACAL & DELTAHET receivers, perfect for AM, CW USB/LSB SSB reception, continuous coverage from 500 KHz to 31 MHz, measured drift of only 50 cycles in half an hour from cold on!, all for only $225

GALAXY RF-550-A In-line power output meter, 0-400 & 0-4000(!) Watt forward & reverse, calibrated and OK for all frequencies from 2 to 30 MHz, with built-in 6-position coax switch, unused portions shorted to ground $75

SWAN VM-1500 In-line power output meter, forward & reverse power 2 to 30 MHz, 4 ranges 0-5, 0-50, 0-500 & 0-1500 Watt rf power, 10% calibration accuracy $50

OMEGA T Antenna noise bridges, 0-100 MHz, indispensable for intelligent antenna work, still only $25

YAESU-MUSEN Transceivers FT 2 FB latest models 2 Meters FM transceivers with microphone and 6 channels crystals, only $225.—!!! FT 200/FP 200 combination $435.—FT 101 $660.—FT DX 560 $525.—FT 101 cooling fans $22.—extra, CW filters $35.—extra noise blankers $20.—

HY-GAIN ANTENNAS, new supplies at lowest prices: 18 AVT/WB $65.—14 AVQ/WB $45.—TH 6 DXX $175.—TH 3 Mk III $145.—TH 3 JR $100.—HY-Quad $130.

ANTENNA ROTATORS CDR AR 22 R $40.—HAM-M $130.— both with 230 V AC indicator/control units.

MIDLAND SWR meters, 52 ohm impedance, single meter type $12.—double meter type $16.—only.

All prices are net, cash with orders, sorry, no credit or terms, ex stock Springwood, Sales Tax included in all cases, subject to changes without prior notice, freight, postage, packing and insurance charges are extras!

SIDEBAND ELECTRONICS ENGINEERING

proprietor-janitor-accountant, financier & no agents — Arie Bles

P.O. Box 23, SPRINGWOOD, Phone Springwood, new number as it was in 1972,
(STD 047) 511394
Private address 78 Chapman Parade on the dirt track to Norman Lindsay Gallery, Faulconbridge.

modifications to the R390A/CRR

Part One continued

running these receivers on 240V AC although the handbook says you can. The offending item is the mains input filter FL101 or to be more precise the capacitors therein, namely C104/5/6/7. If you look at Fig. 2A you will see that the American system for 240V is a balanced system and hence no problems. With the Australian system the neutral is at earth potential (or very nearly so), as will be seen in Fig. 2B. The capacitors are only rated at 250V working. With the American system the peak voltage across any one of the capacitors is 165V (117V x 1.414), this voltage being within the rating of the capacitors. When however, 240V on the Australian system is used the peak voltage across the two capacitors between the active side of the filter and earth is 340V (240V x 1.414) whilst the peak voltage across the other two capacitors between neutral and earth is zero. Usually something has to give and it is normally the capacitors.

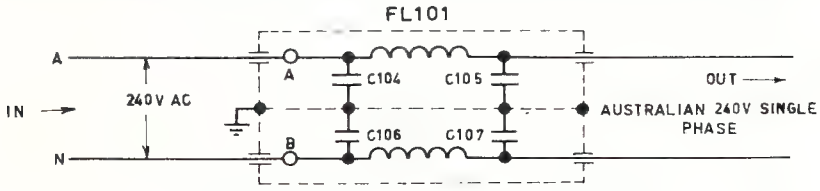

FIG 2b

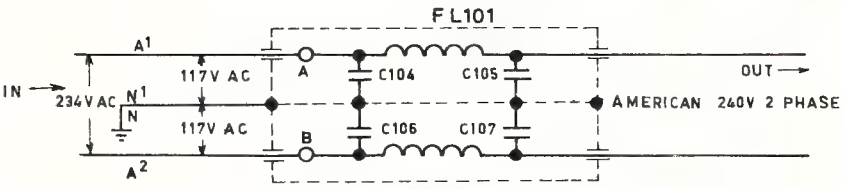

FIG 2a

The filter can be modified or repaired fairly simply by removing it from the receiver (don't forget to switch off the power and pull the plug from the power point before trying this as 240V can bite; I know!) and carefully unsolder the lid from the filter box. Remove wax from the box as well as the offending capacitors and replace them with .01 uF 2000V DC disc ceramics. Check for shorts, etc. with a "MEGGER" or something equivalent, refill with wax, solder on the lid, and refit to the receiver and all the problems should be cured.

One closing thought and that is these modifications and reference numbers are for the R390A/URR **ONLY** as other models use different valve lineups and circuit reference numbers. Best of luck to those who dare.

A following article will provide details of the modifications for the product/FM detector, together with changes to the AGC system, the RF amplifier and some thoughts on the noise limiter/silencer.

(Part Two of this article should be published in the near future — Ed.)

commercial kinks

with Ron Fisher VK3OM

3 Fairview Ave., Glen Waverley, 3150.

Converting the Yaesu FR 50 receiver to cover 160 metres.

First off, I think it would be an idea to give a description of this set. In fact, I think I might continue with this in future articles. No doubt when sets of this type come on to the secondhand market they are unknown to a lot of amateurs and listeners.

Well anyhow back to the FR50. It first came on to the local market early in 1967 and was often teamed up with a matching transmitter, the FL50. The FL50 was reviewed in the October 1968 issue of AR.

The FR50 is a double conversion receiver with a 5172 KHz first IF to a 455 KHz second IF which used ceramic filters to give a three KHz band pass that was reasonable for both AM and SSB. The selectivity was fixed with no provision for change.

The front end was of the tunable type as distinct from the larger FR100 receiver which was crystal locked. Although the oscillator was transistorised, its stability was not one of the good points of the receiver. To date, I have not heard of any one who has been able to cure this fault. The tube line up was straight forward with a 6BZ6 RF, 12AT7 first mixer, 6CB6 second mixer with a crystal locked transistor oscillator, two 6BA6's as the 455 KHz IF, 6BE6 product detector, 6BA6 BFO, and a 6AW8 for the audio.

The FR50 of course is a ham-band-only receiver, in its original form, covering from 80 to 10 metres with a special band for WWV on 10 MHz. The dial was the same type as used on all the Yaesu gear of that time and featured one KHz calibration. Although the accuracy of this was not comparable with the larger receivers and transceivers. Overall performance was quite fair with the exception of the tunable oscillator stability, and a rather high front end noise level.

The modifications to enable the receiver to cover the 160 metre band were worked out by Bob, VK3BOB. (Wonder how he got that call?) The band switch position labled JJY the Japanese WWV, is used for 160. Since it is possible to tune VNG on 7.5 MHz at the high end of the 40 metre range, it is easy to get by without WWV.

When the receiver is set up for 10 MHz the oscillator for this band is tuned to 15,172 KHz. In order to cover 160 it is necessary to drop this to 6,972 KHz. All that is needed is a single 330 pf silver mica or NPO ceramic condenser across the JJY oscillator coil in parallel with the existing fixed padder.

The antenna and RF coils are re-tuned in rather a different manner. Here, of course, it is rather a long way to pad the 10 MHz coils down to 160, but not so far for the 80 metre front end coils and this is just what we do. First, on top of the chassis you will see the trimmers for the antenna and RF coils. Yaesu have kindly put in a few spares, three in fact. Wire these in parallel and add a 220 pf NPO condenser also in parallel. Then wire the next section in the same way, disconnect the JJY antenna and RF coils and tape up the connections for future use. Now wire the paralleled trimmers to the JJY position on the band switch and at the same time arrange the 80 metre coils to connect also to the JJY position.

To align the set for 160, set the tuning dial to "0" and adjust the oscillator trimmer to bring in 1800 KHz. Now 1860 will appear at 450 on the dial. To complete alignment, peak the antenna and RF coils with the three parallel trimmers.

As the dial now covers only 60 KHz it will be necessary to make up a graph of the new calibration against the old — or perhaps exact frequency is not so important on this band.

This completes the conversion to 160 metres. I have noticed in some of the English magazines that a new FR50B is available in Europe and that for an extra 5 Pounds the agents will convert them to cover 160. Just how they do it is not stated, I wonder if anyone knows.

That's all for now, but I'll be back next month with more hints and kinks.

FOR YOUR—

YAESU MUSEN

AMATEUR RADIO EQUIPMENT

in

PAPUA-NEW GUINEA

Contact the Sole Territory Agents—

SIDE BAND SERVICE

P.O. Box 795, Port Moresby Phones 2566, 3111

TRIO

9R-59DS

COMMUNICATIONS RECEIVER

Suggested Retail Price: FOR/FOA SYDNEY $191.00

- 4 BANDS COVERING 540 Kcs. TO 30 Mcs.
- TWO MECHANICAL FILTERS ENSURE MAXIMUM SELECTIVITY.
- PRODUCT DETECTOR FOR S.S.B. RECEPTION.
- AUTOMATIC NOISE LIMITER.
- LARGE TUNING AND BANDSPREAD DIALS FOR ACCURATE TUNING.
- CALIBRATED ELECTRICAL BANDSPREAD.
- "S" METER AND B.F.O.
- 2 MICROVOLTS SENSITIVITY FOR 10 dB S/N RATIO.

Weston electronics PTY LTD

(A unit of Jacoby Mitchell Holdings Ltd)

376 EASTERN VALLEY WAY, ROSEVILLE, 2069.

Cables and Telegraphic Address: 'WESTELEC'

Sydney. Phone: 40 1212

Please forward free illustrated literature and specifications on Trio equipment.

Name.....

Address.....

newcomers' notebook

WITH RODNEY CHAMPNESS VK3UG

44 Rathmullen Rd., Boronia, Vic., 3155.

A few problems this month. The promised information from Harry Heathcote's article combined with my own research has temporarily been delayed. Some of my bright ideas for a simple transceiver worked out to be more complex than I had anticipated, and I think many may have run into bother with it. So I decided to scrap it. A lot of research down the drain! But that is what experimentation is about.

Perhaps there is a lesson to be learned from this. This being that not all projects you may want to play around with can be expected to succeed first time. This is more likely to occur with you the newcomer, as naturally enough, you are less experienced than the person who has been working on electronic equipment of various kinds for many years either as a hobby, or as a profession.

It is unwise to tackle a very complex piece of equipment as one of your first projects. You may get it going but more than likely you will not succeed. If you are designing something you should aim for a much simpler item than copying someone else's design. Until you gain experience resist the urge to "improve" someone else's design. It is not uncommon to hear that someone has copied so and so's design for an XYZ and it doesn't work as it is supposed to. The designer is at fault in the eyes of the builder. On enquiry it is often found that critical parts are substituted, layout is altered, etc. Kitsets with printed board layouts get rid of most of these problems, but even here some constructors have managed to get components hooked up wrongly. Goodness knows how!

I notice in May "Amateur Radio" that there is a possibility of a Novice Licence being introduced. "Newcomers' Notebook" is already aimed at this level; as well as the SWL and more advanced amateur. The Novice Licence would seem to be a logical stepping stone to the higher grades of licence.

Next month I hope to have Harry Heathcote's article as well as amended ideas on simple transmitters. I must include in an early article ideas on how to design and build equipment which will suit your own individual requirements. The drawing board definitely precedes the use of the drill and chassis punch.

Postmaster-General's Department

Australian Post Office

COMMUNICATIONS HOUSE 199 WILLIAM STREET MELBOURNE VICTORIA 3000

TELEGRAMS POSTAL MELBOURNE • TELEX 30146 • TELEPHONE 63 0331 (AREA COD

Reference: 320/5/87

24 MAY 1973

Dear Sir,

Thank you for your letter of 30th April, 1971, concerning the proposal to introduce "Novice" licences in Australia.

Careful consideration has been given to the suggestions put forward by your Federal Convention and I am pleased to advise that the Department will agree to those outlined in (b), (c) and (d). The inclusion of an additional frequency allocation in the 28.100-28.300 kHz section of the 10 metre band, requested in (a), will not be authorised as it is considered that the bands already suggested for "Novice" licensees are sufficient for the purpose at this stage.

Use of the letter "N" after the state identification numeral in the callsign, to identify transmissions by "Novice" licensees, appears to be practicable and will be adopted. Where a "Limited" licensee is granted a "Novice" licence also, in accordance with your suggestion "C", it is proposed that two licences will be issued with a separate fee for each. One callsign will be allocated using the "Z" identification for the "Limited" licence and "N" for the "Novice" licence. The licensee would of course, be required to use the appropriate callsign when operating in bands exclusively authorised by a particular licence.

As indicated in our letter of 25th March, 1973, it will be necessary to amend the Wireless Telegraphy Regulations before "Novice" licences may be introduced and the necessary Ministerial approval will now be sought for such action to be taken.

Controller,
Regulatory and Licensing Section,
Radio Branch.

Mr. D.A. Wardlaw,
President,
Wireless Institute of Australia,
P.O. Box 150,
TOORAK, VIC., 3142.

Further interesting correspondence regarding Novice Licensing.

PROJECT AUSTRALIS

OSCAR 6

Peter Frith, VK7PF, has logged 94 stations working through the satellite to date. These are — **VK1's** DA, MP, VP; **VK2's** AF, AM, BX, JR, NN, RX, ASI, ZQJ, ZRH, ZWL; **VK3's** OG, ACA, ALZ, AMH, AOT, ASQ, ASV, ATN, AUU, YFL, ZDH, ZUR; **VK4's** LC, NO, NP, QD, ZQ, ZEL, **VK5's** DK, MC, NY, RO, SU, WB, ZK, ZDR, ZHJ, ZTN; **VK6's** BO, DR, GL, HK, WA, ZCX; **VK7's** IR, JV, KK, LZ, MR, PF, WH, ZAZ, ZGJ; **VK9's** BP, GN; **ZL1's** WB, AOF, AVZ, TAA, TNS; **ZL2's** CD, GL, HP, AJU, AJZ, ARW, BJO, TCU, TDC, TFJ, THZ, TKC, TKP, TOJ; **ZL3's** DI, NH, QL, THC, THQ, THV; **ZL4's** DS, HS, JW, LV, NH, OX, PJ, TBB, TCP. Also DU1POL and KX6HK.

an a.r. special

customs import duties on transceivers

The Wireless Institute of Australia, properly recognising the legitimate claims of domestic manufacturers to reasonable Tariff protection, has pressed for many years that specialised amateur radio equipment should be recognised as articles suitable for importation duty free or at low rates of duty if nothing suitable or equivalent is produced in Australia.

These efforts are now receiving recognition although as might be expected, success carries certain limitations. Work has not stopped in this field but is being continued with the objective of attempting to secure results of a more permanent nature and hopefully on a wider range of apparatus with less restrictive qualifications.

In a letter dated 15th May to the Institute from the Department of Customs and Excise the following two paragraphs are significant.

"Extensive enquiries have now been conducted in this matter and it has been decided that by-law admission of certain tranceivers specially designed for use by licensed amateur radio operators would not be detrimental to local industry.

Accordingly applications for by-law admission of transceivers accompanied by details of the equipment and supported by evidence that the user is a licensed amateur radio operator will receive consideration in the light of availability of suitably equivalent goods of Australian manufacture."

Several important aspects of this should be noted. Firstly it covers only transceivers and there is good reason to believe that such transceivers must be amateur band transceivers in the range from 160 metres to 10 metres covering one or more of such bands. Transceivers which also cover or are designed to cover, other parts of the spectrum may be refused the by-law admission. Presumably some additional evidence can be demanded by Customs for any transceiver which is not described as amateur transceivers although it might be designed for use solely on one of the bands allocated to the amateur service. It is not known at this stage whether or not certain transceivers or certain kinds of transceiver will be excluded from this by-law admission but indications are that transceivers in the higher price bracket might be affected.

Secondly, although the wording is such that there is no requirement that a licensed amateur must himself import the article there is hope that he can obtain his transceiver through the trade (importer/agent/retailer) in the normal way but he must co-operate fully with the trader by producing a photo-copy of his licence with a certificate that the transceiver is for his own use. If the amateur does not fully co-operate with the trader there seems little hope of him obtaining his transceiver duty free. It is reasonable to assume that any extra work which a trader has to do to obtain duty free admission of a particular transceiver for a particular amateur must normally involve extra expense which will assuredly be added to the final price.

Thirdly, it is reasonable to assert that nobody should order or attempt to import a transceiver in the expectation of obtaining by-law admission until actually receiving the prior approval in writing from the proper authority. Such approval does not constitute an obligation to import — it merely confers a right on the importer. It should be noted that applications for this by-law admission must be sent to the proper authority on the proper form fully completed in detail and supported by illustrated descriptive matter. The form states that where the duty remission is less than $100 the application will not be processed. Because amateurs who might wish to import more than one transceiver could be claimed as traders as opposed to users' caution must obviously be exercised in this respect in the same way as applying more than once within a long period of time without good reasons. There are no grounds for believing that importation of a transceiver as accompanied or unaccompanied baggage would be excluded from the concession but it would obviously be prudent to state this fact on the By-Law application form.

It is known that the import duty exceeds $100 each on most of the more popular new transceivers for HF band DX-ing purposes. On a used transceiver however, the duty could be less than $100 and in this event an anomalous situation could arise which, in the case of an importation in household and personal effects, should have been resolved in advance at the by-law application stage anyway.

Fourthly, because of all the factors involved, a long delay must be anticipated in attending to all the details. Naturally it is not known if any trade importer will find it worth his while to bring in stock of acceptable transceivers to be held in bonded warehouse so as to reduce the inevitable delivery delays when amateurs succeed in obtaining by-law approvals. Any amateur having full information available to him and having the means to import a transceiver will have to weigh the cost and other advantages and disadvantages of the various methods available to him. However, anyone who has no knowledge of importing goods would be unwise to embark on this activity and should therefore order through the trade, preferably through one of the reliable dealers regularly advertising in A.R.

Fifthly sales tax is paid on the duty-paid price of transceivers. Consequently the amount of this tax will be less on a duty-free transceiver.

Perhaps a word of warning is worth inserting at this point. It could take some time before this by-law concession could lead to reduced prices "in the shops". Traders hold stocks at present of duty-paid transceivers and they do not know precisely how these concessions can be converted into practical use for the future let alone relative to the turn-over of their existing holdings. It might well be considered impracticable by Customs to specify by-law approval for a transceiver with a particular individual serial number. Hence the delivery to an importer of a duty-paid transceiver at a duty-free price against the assurance of a future importation of a duty-free replacement is a matter which the trade will have to probe and consider. All these factors are the inevitable outcome of a duty concession based on end-user criteria.

The W.I.A. is aware of these, and other disiderata and believes that positive import-free identification of an article in its own right is preferable to the end-usage concept. The reader can readily appreciate this if, instead of particular kinds of transceivers, the whole question revolved around, say, cricket bats or washing machines. We are grateful for this concession but are aware of the problems.

If any member of the Institute would like to have further details please write, enclosing a stamped self-addressed envelope to the Executive office but please be tolerant of a much delayed reply because this office is still severely overloaded, with other work. Any amateur obtaining or being refused a by-law remission on an amateur transceiver is requested to send in details (make, model, number, etc.) to the Executive office so as to compile a central record. Finally, for the benefit of visitors to Australia, it could be useful to obtain a by-law concession in advance on any transceiver you might want to import temporarily as this obviates the necessity of (a) claiming other import concessions and (b) restrictions as to disposal in the country if you later decide not to re-export it.

(An article listing duty free concessions under by-law for other of the more important items of amateur equipment is under preparation for a future issue of A.R. — Ed.)

awards column

With Geoff Wilson, VK3AMK

DANNEVIRKE CENTENNIAL AWARD (NEW ZEALAND)

Made available by the Dannevirke Branch (Number 06) of N.Z.A.R.T. for amateur radio station operation to stimulate contacts with Dannevirke Branch Stations; to celebrate 100 years establishment as a Country Town and District.

1. Australian and DX to contact two Dannevirke Branch members stations
2. New Zealand; 5 stations.
3. All contacts between 1st October, 1972 and 1st October, 1973
4. Any bands or modes or mixed bands or mixed modes.
5. Send list of stations worked giving Date, Time, Band and Mode certified by two other amateur stations.
6. Australian and DX charge three IRC's.
7. New Zealand 40 cents.
8. QSL cards not needed for Award.
9. To. Award Custodian,
   Mr. C. B. Howard, ZL2AHY,
   19 Queen Street,
   Dannevirke,
   NEW ZEALAND

The following Dannevirke Branch members are active. ZLs 2CF, 2HE, 2JB, 2WM, 2AAS, 2ABT, 2ADF, 2AGM (Branch Station), 2AHY, 2AOW, 2AQM and 2AYD.

Dannevirke is a small country town (population 5,000) of dairying, sheep and beef, settled in 1872/73 by Scandinavian settlers. The town is located 100 miles north-east of Wellington.

W.I.A. V.H.F.C.C. AWARD

	Cert. No.	Call	Confirmations 52 MHz	144 MHz
New Member:	89	VK3YBM	—	100
Amendments:	46	VK3ZNJ	300	—
	47	VK3ZNJ	—	312
	80	VK4ZIM	797	—

W.I.A. 52 MHz W.A.S. AWARD

Cert. No.	Call	Additional Countries
91	VK3KK	3

W.I.A. D.X.C.C.

In the May listing VK3YD was shown incorrectly as VK3YK.

As from 30th June 1973, I will no longer be Federal Awards Manager **and would request that no further applications, enquiries etc. be directed to me.**

THE NEW FEDERAL AWARDS MANAGER IS:
MR. BRIAN AUSTIN, VK5CA
P.O. BOX 7A
CRAFERS, S.A. 5152

ALL CORRESPONDENCE CONCERNING AWARDS SHOULD HENCEFORWARD BE SENT DIRECT TO VK5CA.

HEATHKITS V.H.F WATTMETER HM 2102. $40.53. Incl. Sales Tax.

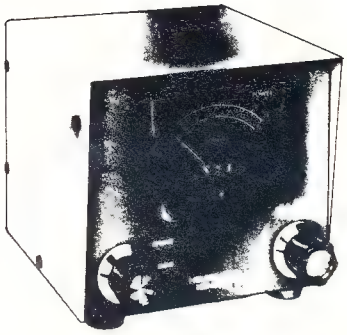

50 MGHZ to 160 MGHZ Power Range 1 W to 250 W. Ideal for 2 Meter rigs.

HEATHKIT SIGNAL MONITORS. SB 610 $140.25 Incl. Sales Tax.

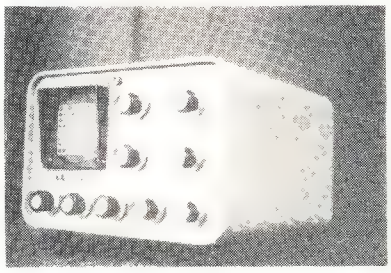

Gives accurate display of Transmitted AM, CW, SSB and RTTY. SIGNALS.

Operates 160-6 meters 15W to 1 KW.

Available from:—
S.I.A., P.O. Box 138, KEW, VIC., 3101.
S.I.A., P.O. Box 408, CROW'S NEST, N.S.W., 2065.
Fairy A'asia, P.O. Box 221, ELISABETH, S.A., 5112.
Athol Hill, Box F 354, G.P.O. PERTH, W.A., 6001.
L. E. Boughen, P.O. Box 136, TOOWONG, QLD., 4066.

VHF UHF

an expanding world

With Eric Jamieson, VK5LP

Forreston, S.A., 5233.

Closing date for copy: 30th of month.
Times: E.A.S.T.

AMATEUR BAND BEACONS

VK0	52.160	VK0WI Macquarie Island
	53.100	VK0MA Mawson
VK2	52.450	VK2WI Dural
VK3	144.700	VK3RTG Vermont
VK4	52.600	VK4WI/2 Townsville
	144.400	VK4WI/1 Mt. Mowbullan
VK5	53.000	VK5VF Mt. Lofty
	144.800	VK5VF Mt. Lofty
VK6	52.006	VK6VF (VK6RTV) Bickley
	52.900	VK6TS (VK6RTT) Carnarvon
	144.500	VK6RTW Albany
	145.000	VK6VF (VK6RTV) Bickley
VK7	144.900	VK7VF (VK7RTX) Devonport
VK8	52.200	VK8VF Darwin

GEELONG

The Geelong Amateur Radio and TV Club Newsletter comes to hand on time again and continues with further information about SSB on 2 metres by Mike, VK3ASQ. There is also interesting article on the subject of Tariff Board protection colour TV manufacturers — quite interesting indeed! Also from its pages comes advice of a record-breaking 2 metre contact ... I quote "A good start to the 'Return to Two' campaign was made by Ken, VK3ZNJ, with a record contact from Geelong to Wentworth Falls in the Blue Mountains of N.S.W. approximately 60 miles west of Sydney. This is a record for a tropospherei contact on a north-south path on 2 metres from Victoria. Contact was made on Friday 11th May at 2205 on 144.050 and was held for five minutes with signals 5 x 9 both ways. Station worked was Tom VK2NN ... Ken running 175 watts PEP to 7 element beam, Tom using 350 watts PEP and 10 element yagi." Quite a good effort boys, shows what can be done if you are on the band when conditions are right ... next step to Brisbane?

Before leaving the Geelong boys, I am sure readers will join with me in wishing their Club successful celebrations for their 25th anniversary of operation to be held shortly. The first meeting was held on 7th June, 1948. First President Mr. A. Bell, VK3ABE, first Secretary Mr. R. Wookey, VK3IC.

FEDERAL CONVENTION

This page does not comment very often on such occasions as results, etc. are generally fully tabulated in other ways. Certainly I don't propose entering the "Repeater Arguments" which have been given prime reading space in most publications, suffice to say however, that the proposed "1973 2 metre Bandplan" was not the most popularly received item from the Convention

The Novice Licencing structure was passed with a request for a 100 KHz segment of 28 MHz as well. Already I know of several boys still going to High School who have shown an interest in such a licence. It is hoped if such a licence is implemented it will see a re-kindling of interest in amateur radio.

An item which of course was of immense interest to me, and to many others too I guess, was that in relation to the proposal to allow use of a segment of 50 MHz outside of Channel 0 hours and service areas. It has been one of the at frustrations in Australia that our band is removed by 2 z from the centre of main activity of overseas in the 6 metre band. No one could deny that probably many useful contacts could have been made in the past had stations in both areas been on the same portion of the band.

Contacts with KR6 and W come to mind as increased possibilities, and across the Indian Ocean to Africa and VS6. WB6KAP runs annual TEP observations and these might be assisted considerably if our area could have access to some of his frequencies. Successful moonbounce has been achieved in the US using 50 MHz — what chance have we for any participation under present conditions?

With the present state of the art producing first rate equipment with extremely good stability (e.g. moonbounce and meteor scatter operation on precisely known frequencies), with the greater use of commercial SSB equipment as the frequency determining side of things, a widening of the scope of activities would seem merited. Any thoughts?

432 MHz

Whilst news of overall activity on this band is scarce except for continuing high level of activity in VK5 with ATV three Adelaide stations are conducting experiments with colour TV, namely, Maitland VK5AO, Graham VK5ZOF and Ray VK5ZEF; some of it I have seen and it looks good. In the field of black and white, additional stations operating are Pat VK5ZFX and Bill VK5HD.

On the construction side, the May issue of "6 UP" has a very fine article by Roger VK2ZRH on a 70 cm SSB transmitter, with excellent detailed circuits of the various sections, ending with a pair of 4CX250B for the PA. Useful information is given, plus a very generous page on the tuning and alignment procedure. All in all an outstanding contribution for the current state of the art for that band.

144 MHz

The very large stable high pressure system over southern Australia during the middle of May extended the range of two metre contacts quite considerably, on this occasion the FM networks were well to the fore.

For those interested in looking further afield, I have been advised that a number of stations in VK1 and south-eastern N.S.W. will be looking for contacts. There are VK3ANP and VK3AJN at Wangaratta, VK1MP and VK1JL in Canberra. The latter runs low power but has a good location, which is more important. In N.S.W. we have VK2ZBP near Junee, VK2SW at Wagga, and of course VK2ZEI at Deniliquin. Further north there are VK2ZAY at Boggabri and VK2ZCV at Tamworth. Most operate on SSB so it need only be a matter of time for the right conditions to open the way to some of these stations.

SOME THOUGHTS ON CONVERTERS

With the present "Return to Two" campaign getting under way, I feel the following article in the May issue of the W.A. VHF Group News Bulletin quite relevant, and may help some of our less experienced amateurs to start on or continue with VHF. The article has the above heading and is by VK6ZCX.

"Thinking of building a MOSFET converter? Unless you are planning some moonbounce work, you may be disappointed with the results. What about your old valve converter? Can it be updated to serve until you get around to the MOSFETS? Let's see.

"Perhaps it never worked very well.

"If you can **see** the lead on any screen or cathode bypass capacitor, it is too long and the gain and stability of the converter would improve markedly if you bypassed it properly. And don't bypass the end of the socket pin. Solder right up near the socket.

"In a critical position (cathode of RF stage) **two** bypass capacitors in parallel may be needed. Two 100 pF's can be much better than a single .001 uF at 144 MHz.

"If something is supposed to be earthed. EARTH IT, solid. THE PINS OF A 9 PIN SOCKET WILL REACH THE RING AROUND THE SOCKET IF FORCED WITH A SCREWDRIVER. Don't use the central spiggot for anything. Earth it, but don't bypass anything to it. Using this as a standoff insulator is just inviting instability.

"If your layout is such that you **have** to use a connecting wire in the signal path (i.e. near any tuned circuit) use shim brass, cut into ¼" strips. 1" of tinned copper wire is ludicrous at 144 MHz and poor at 52 MHz unless it is intended to be part of a tuned circuit.

Speaking of tuned circuits, if you are using more than 14 pF at 52 MHz then you need a bigger coil, if you want efficient operation. Just resonating a tuned circuit does not make it efficient

"Incidentally, do your tuned circuits actually go through resonance, or just approach it at one end of the capacitor's range? That extra few pF should make a difference if your tuned circuit is working OK.

"If you want to couple two tuned circuits together, couple the coils end to end, not side by side. **All** that flux comes out the end of the coil, only part of it goes along the sides.

"Have you got enough injection? To check, measure the mixer plate current. Application of injection should cause a reduction of about 10% in the plate current. All the above comments were just as true 15 years ago as they are now. They are things that make the difference between good converters and unstable, gainless wonders.

"Overtone oscillators using VHF crystals will improve most birdie problems. If you have less rubbish you have less birdies obviously. But don't just use a "Robert Doller" with 90% feedback. These rocks don't need to be thrashed into overtone. They **like** overtoning. If you thrash them they get hot and drift. So easy does it.

"A bugbear of most converters is output coupling. Cathode followers used to be about the best compromise between a simple resistive load on the mixer (yuk!) and a tuned transformer with its narrow bandwidth.

"Now we have ferrite baluns. Wind 20 turns of 26 SWG enamel wire on one of the figure 8 type TV baluns (winding in one hole and out the other) and then 2 turns of insulated hookup wire on top of the 1st winding.

"Use the 20 turns as a plate load and take the output (50-75) from the secondary. It is broadbanded and presents a reasonable load to the mixer. Just one more thing, a 10 pF capacitor from plate to earth, just to stop the mixer taking off.

"Tube types don't actually have much obvious effect as long as they are capable of operating at the frequency in use. Probably more important is the convenience of the pin layout for the circuit we are trying to use.

"In general, pentodes should not be used at 144 MHz as signal amplifiers, although they make good frequency multipliers. If the RF stage has worthwhile gain, a pentode can be used as a mixer, if absolutely necessary.

"If your convertor uses a free-running oscillator or octal valves, perhaps a decent burial would be in order. Otherwise, why not drag out that old converter and see if it can be given a new lease of life?"

And a comment or two from me to add to the above. The basic R.T.V. and H. 52 and 144 MHz converters using a 6ES8, 6BL8 abd 6U8 which were featured back around 1963 are still a good start for anyone going along with valves. Many were built and are still operating. Sure, there are some better ones, but you will hear plenty with those mentioned. High gain is not particularly necessary, and a darn nuisance if you are subject to cross-modulation from nearby stations, particularly on 52 MHz. Bob VK5ZDX, has done very well over the years using a single 12AT7 for the front end of his 6 metre converter, half the 12AT7 as the RF amp, and the other half as the mixer. Bob lives in an area of very high activity, and he has worked plenty of DX.

Additionally, what helps to make the DX audible is to have a quiet location. These are few and far between today, but quite an improvement can be made by narrowing down the bandwidth of the tunable IF receiver. If you are able to feed your converter into an SSB receiver or transceiver, and resolve all stations **as** sideband signals (true SSB stations are now common on VHF, and AM stations which are stable enough can be copied quite well by listening to one sideband only) you will be quite surprised at the results.

That about wraps it up for this time. Activity from the point of national interest is not bright at the moment, the winter doldrums having set in. However, this is the time to overhaul the gear but keeping an ear on the bands whilst doing such work in the shack.

Closing with the thought for the month: "You must change with the times unless you are big enough to change the times."

— The Voice in the Hills

you and DX

Times: GMT

(We regret that again this month, no copy has been received from Don Grantley. However, the following notes were compiled from information that filtered into the Federal Office — Ed.)

Willis Island

A recent caller at the Executive office was Kevin Collins, VK4TU. Kevin advises he is moving QTH to Willis Island late in June for five months and hopes to begin operating as VK9ZC about 1st July. On the way over to Willis he intends to operate Maritime Mobile about 23rd to 25th June.

Amateur Radio at the American National Scout Jamboree

Amateur radio will be demonstrated in early August to more than 100,000 participants and visitors at the National Scout Jamboree, sponsored by the Boy Scouts of America. Special amateur radio stations will be in operation at each of the two Jamboree sites: Farragut State Park, Idaho, and Moraine State Park. Pennsylvania. The purpose of these stations is to promote amateur radio among youth, to interest scouts in earning the radio merit badge, to handle messages between the scouts and their homes in co-operation with area radio amateurs and nets, and to provide contact with the Jamboree for those not able to attend. Communication will also be provided between the two widely-separated Jamboree sites.

Three separate operating positions are expected to be manned almost continuously, using the special events call signs KJ7BSA July 28 — August 9 from Idaho, and KJ3BSA July 30 — August 11 from Pennsylvania. QSL requests accompanied by a stamped, addressed envelope may be directed to 225 Main Street, Newington, CT 06111. All other contacts will be confirmed via the bureau. Suggested frequencies for finding KJ3BSA and KJ7BSA are 5 KHz above the lower limit of the General and Novice subbands: for example, 3530, 3705, and 3895 KHz on 80 meters.

Scandinavia

NRRL (Norsk Radio Relae Liga) in Oslo advises that the Norwegian Telecommunication Authorities have granted all types of conventional emissions (except A2) to Norwegian amateurs, including RTTY, SSTV, VHF-TV repeaters, 600W P.E.P. input any mode. In addition they have been granted for Norwegian citizens over the age of 14 years a new Novice Licence valid two years, 15W input, CW only, any band, with the prefix LB. The other Norwegian prefixes are LA and LG, plus JW for Svalbard with Bear Island, JX for Jan Mayen and 3Y for Bouvet Island and Norwegian area in Antartica. In 1973 Norwegian amateurs will be managing the 15th Scandinavian Activity Contest 15th and 16th September for CW and 22nd and 23rd September 1973 for phone

The same source included in their envelope a note by ARIM about the call signs LG5GL and SK9WL allocated to the independent territory of Morokulien situated between Norway and Sweden and established, ARIM states, by agreement between the Governments of the two countries in conjunction with the International Refugee Year of 1959. The two stations were set up on 30.6.1968, as Memorial Funds to provide for education and amateur radio equipment for blind and physically handicapped radio amateurs. QSL cards, it is stated, should be sent with 3 IRC's (four if direct return QSL is required) to P.O. Box 1, N2242/S 67044, Morokulien, Scandinavia. If you want to become a "Citizen of Permanent Standing" of Morokulien send the equivalent of U.S.$4 which entitles you to a letter of Citizenship.

Random jottings

L.A.B.R.E. (Liga de Amadores Brasileiros de Radio Emissao) advises that their QSL Bureau from January 1973 onwards is P.O. Box 070004-70000 Brasilia-DF-Brasil and that the prefix PT is used for the city of Brasilia Is any VK amateur likely to be in Greece about mid-November 1973? The National Amateur Radio Union of Greece advises they are considering a First International Congress of Radio Amateurs in Athens at that time. The International Amateur Radio Club of Geneva (4U1ITU) gives publicity to recommending the period July 26 to August 14, 1972, being a Retrospective World Interval in view of the exceptional solar and geophysical events which occurred therein. The I.A.R.C. also advised that further contributions of logs under the CPR-Special Award relating to observations during that period of time will continue to be received.

Awards

In one week's mail one member requests A.R. to publish a reference list of awards and where to apply whilst another asks "Do you chase Awards?" — Got quite a collection — or just starting? No matter. Join A.H.C. and receive all the latest info on awards, certificates, trophies, etc. Life membership is $1 and includes a certificate plus bulletin sheets approximately four times a year. For further particulars write to A. Shawsmith, VK4SS, (QTHR, enclosing S.A.S.E.) the Oceania Sec., Award Hunters Club International.

contests

With Peter Brown, VK4PJ

Federal Contests Manager, G.P.O. Box 638, Brisbane, Qld., 4001.

(The Friendly Contest) notes for 1973.

We have gone back to the scoring table of 1971 because comment generally favoured that table.

Also please note that "one operator — one log" does not hold any longer. In future an operator may, in addition to his own log, submit a **club** and/or **divisional** station log. More than one log under any one call sign is not acceptable.

FOR 1973 R D.

Make sure that everyone you contact enjoys the Contest and there will be no doubt that you will enjoy it.

Make sure that we achieve at least 700 log entries by talking about the contest with all your friends, on and off the air.

Make sure that **your** Division puts up a good show

Help the ZLs with their MEMORIAL CONTEST .80 meters. 7th and 8th July.

RULES FOR THE 1973 REMEMBRANCE DAY CONTEST.

A perpetual trophy is awarded annually for competition between Divisions of the Wireless Institute of Australia. It is inscribed with the names of those who made the supreme sacrifice and so perpetuates their memory throughout Amateur Radio in Australia.

The name of the winning Division each year is also inscribed on the trophy and, in addition, the winning Division will receive a suitably inscribed certificate.

Objects: Amateurs in each VK call area, including Australian Mandated territories and Australian Antartica, will endeavour to contact Amateurs in other VK and ZL call areas on all bands.

Amateurs may endeavour to contact any other amateurs on the authorised bands above 53 MHz, (i.e. intrastate contacts will be permitted in the VHF/UHF bands for scoring purposes).

Contest Date: 0800 hours GMT on Saturday 18th August, 1973, to 0759 hours GMT on Sunday 19th August, 1973.

All amateur stations are requested to observe 15 minutes silence before the commencement of the contest on the Saturday afternoon. An appropriate broadcast will be relayed from all Divisional stations during this period.

Rules:

1. There shall be four sections to the contest—
   (a) Transmitting, phone.
   (b) Transmitting, CW.
   (c) Transmitting, open.
   (d) Receiving, open.
2. All Australian Amateurs may enter the contest whether their stations are fixed, portable or mobile. Members and non-members are eligible for awards.
3. All authorised Amateur bands may be used and CROSS-MODE OPERATION IS PERMITTED. Cross-band operation is not permitted.
4. Amateurs may operate on both "phone and CW during the contest", i.e. 'phone/'phone, CW/CW, or 'phone/CW. However, only one entry may be submitted for sections (a) to (c) in Rule 1.
   An open log will be one in which points are claimed for both 'phone and CW transmissions. Refer to rule 11 concerning log entries.
5. For scoring only one contact per band per station is allowed. However, a second contact on the same band using an alternate mode is permitted. Arranged schedules for contacts on the other bands are prohibited
   On bands 52 MHz and above, additional contacts may be made with the same station provided that two hours elapse after the previous contact with that station on that band.
6. Multi-operator stations are not permitted. Although log keepers are permitted, only the licensed operator is allowed to make contact under his own call sign. Should two or more wish to operate any particular station each will be considered a contestant and must submit a log under his own call sign. Such contestants shall be referred to as "substitute operators" for the purpose of these rules and their operating procedures must be as follows:
   Phone. Substitute operators will call "CQ RD, or CQ Remembrance Day" followed by the call of the station they are operating, then the word "log" followed by their own call sign, e.g. "CQ RD from VK4BBB log VK4BAA".
   CW. Substitute operators will call "CQ RD de followed by the group call sign comprising the call of the station they are operating, an oblique stroke and their own call", e.g. "CQ RD de VK4BBB/VK4BAA"
   Contestants receiving signals from a substitute operator will qualify for points by recording the call sign of the substitute operator only.
7. Entrants must operate within the terms of their licence.
8. CYPHERS. Before points may be claimed for a contact, serial numbers must be exchanged and acknowledged. The serial number of 5 or 6 figures will be made up of the RS (telephony) or RST (CW) reports plus 3 figures that will increase in value by one for each successive contact. If any contestant reaches 999 he will start again with 001.
9. ENTRIES must be set out as shown in the example, using one side of the paper only and standard W.I.A. log sheets if possible. Entries must be clearly marked "Remembrance Day Contest 1973" on the envelope and must reach the Federal Contest Manager, W.I.A., Box 638. GPO, Brisbane, in time for opening on Wednesday, 20th September, 1973. Early entries will be appreciated.
10. Scoring will be based on the table shown.
    Portable operation: Log scores of operators working outside their own call area will be credited to that call area in which operation takes place, e.g. VK5ZP/2. His score counts toward VK2 total points score.
11. All logs shall be set out as in the example shown and in addition will carry a front sheet showing the following information:
    Name .....
    Address .....
    Section .....
    Callsign .....
    Claimed score .....
    Number of contacts .....
    Declaration: I hereby certify that I have operated in accordance with the rules and spirit of the contest.
    Signed .....
    Date .....
    All contacts made during the contest must be shown in the log submitted – see Rule 4. If an invalid contact is made it must be shown but no score claimed.
    Entrants in the "Open" sections must show CW and phone contacts in numerical sequence.
12. The Federal Contest Manager has the right to disqualify any entrant who, during the contest, has not observed the regulations or has consistently departed from the accepted code of operating ethics. The Federal Contest Manager also has the right to disallow any illegible, incomplete, or incorrectly set out logs.
13. The ruling of the Federal Contest Manager of the W.I.A. is final and no disputes will be entered into.

Awards:

Certificates will be awarded to the top scoring stations in Sections (a) to (c) of rule 1 above, in each call area, and will include top scorer in each Section of each call area operating exclusively on 52 MHz and above. VK1, VK8, VK9, VK0, ZL1, ZL2, ZL3, ZL4 and ZL5 will count as separate areas for awards. There will not be an outright winner. Further certificates may be issued at the discretion of the Federal Contest Manager.

The Division to which the Remembrance Day Trophy will be awarded shall be determined in the following way—

$$\frac{\text{Average of top six logs} + \text{Logs entered}}{\text{State Licensees}} \times \text{Total points from all entrants in Sect. (a,b,c).}$$

VK1 scores will be included with VK2, VK8 with VK5, and VK0 with VK7. Also VK9 logs and score will be added to the Division which is geographically closest. ZL scores will not be included in the score of any W.I.A. Division.

Acceptable logs for all sections shall show at least five valid contacts. The trophy shall be forwarded to the winning Division in its container and will be held by that Division for the specified period

Receiving Section: (Section d)

1. This section is open to all short wave listeners in Australia and New Zealand, but no active transmitting station may enter.
2. Contest times and loggings of stations on each band are as for transmitting.
3. All logs shall be as set out in the example. The scoring table to be used is the same as that used for transmitting entrants and points must be claimed on the basis of the State in which the receiving station is located. A sample is given to clarify the position
   It is not sufficient to log a station calling "CQ" — the number he passes in a contact must be logged.
   It is not permissible to log a station in the same call area as the receiving station on the MF and HF bands, (1.8-30 MHz), but on bands 52 MHz and above, such stations may be logged more than once per band, for one point on each occasion. See example given.
4. A station heard may be logged once on phone and once on CW for each band.
5. Club receiving stations may enter for the Receiving Section of the contest but will not be eligible for the single-operator award.
   However, if sufficient entries are received, a special award may be given to the top receiving station in Australia. All operators must sign the declaration.

Awards:

Certificates will be awarded to the highest scorers in each call area. Further certificates may be awarded at the discretion of the Federal Contest Manager.

remembrance day contest, 1972

"the friendly contest" August 18th and 19th

at least 700 log entries required

SCORING TABLE

From \ To	VK0	VK1	VK2	VK3	VK4	VK5	VK6	VK7	VK8	VK9	ZL1	ZL2	ZL3	ZL4	ZL5
VK0	-	6	6	6	6	6	6	6	6	6	2	2	3	4	1
VK1	6	-	1	1	2	3	5	4	6	5	1	2	3	4	6
VK2	6	3	-	1	2	3	5	4	6	5	1	2	3	4	6
VK3	6	4	1	-	2	1	4	3	6	5	2	2	3	4	6
VK4	6	3	1	2	-	3	6	5	4	3	3	3	3	4	6
VK5	6	5	2	1	3	-	4	3	3	6	4	4	4	5	6
VK6	6	6	2	1	4	2	-	3	5	6	4	4	5	6	6
VK7	6	5	1	1	3	2	5	-	5	6	2	2	3	4	6
VK8	6	5	1	1	2	3	6	4	-	3	4	4	6	6	6
VK9	6	5	1	2	3	4	5	6	1	-	5	5	6	6	6
ZL1	6	1	1	1	2	2	5	3	5	6					
ZL2	6	1	1	1	2	2	5	3	5	6					
ZL3	6	3	3	3	4	4	6	4	6	6					
ZL4	6	4	4	4	5	5	6	5	6	6					
ZL5	1	6	6	6	6	6	6	6	6	6					

Read table from left to right for points for the various call areas. In addition, all intrastate contacts on 52 MHz and above are worth 1 point each per band.

EXAMPLE OF TRANSMITTING LOG

Date/time GMT	Band	Emission Power	Call sign Worked	RST Sent	RST Rec'd	Points

EXAMPLE OF RECEIVING LOG. VICTORIAN SHORT WAVE LISTENER.

Date/time GMT	Band	Emission	Call sign heard	RST Sent	RST Rec'd	Station Called	Point Claim
Aug '73							
19/0612	7 MHz	A3	VK5PS	58002	-	VK6RU	1
19/0615	7 MHz	A3	ZL2AZ	59103	-	VK3KI	2
19/0700	52 MHz	A3	VK3ALZ	57012	-	VK3BQ	1
19/0723	52 MHz	A3	VK4ZAZ	56013	-	VK5ZDR	2

an a.r. special

australian amateur radio—and history

A member writing from Brisbane enquires if such a thing exists as a permanent display A.R. Museum and is any detailed documentation being done on past amateur radio VK personalities. So many OT's pass on and nothing or little is recorded about them. Many in their own way or fashion did a lot for amateur radio.

The 1971 Federal Convention held in Brisbane passed a Motion which read — "THAT the Divisions make use of the facilities provided by their various State Authorities for the preservation of historical records and items of equipment of historical value. A catalogue should be retained locally and a copy sent to (Federal) Executive of all such items to enable ready reference to where such items may be found and to form the basis of maintaining a central index." Various Fed. Councillors mentioned State museums and libraries because of the storage, expense and systematic preservation and retrieval problems on a centralised Institute basis.

In his Annual Report tabled at the 1973 Federal Convention the Federal Historian (Mr. G. M. Hull, VK3ZS) wrote "In my report for the year 1972, I suggested that Federal Council give thought to the formation of a proper historical committee composed of at least four persons and that a continuous arrangement of House Advertisements be run in A.R. calling for donations or gifts of old books, magazines and documents which would assist in the compilation of the history of amateur radio." His report also included a suggestion that as A.R. can now reproduce photographs without extra expense the Historical Section might release selected historical photographs with a brief extract from history for publication. "In this way", he wrote, "the Australian amateur will be aware that the Institute is doing something about its history, and those who have contributed records will know that the information hasn't been filed somewhere to gather the dust of time. In addition, such publication of history may attract others to contribute documentary records which may serve to fill the still existing gaps. I can only say that work is proceeding within the limitation of available time for both myself and George Glover, VK3AG".

The Brisbane writer also wrote "I have often thought that a Historian for each State — all being responsible to the Federal Historian — would be a progressive idea.

There the matter rests for the time being. Except that no central index has begun and no details are available from Divisions about their own efforts to preserve in good time that which would otherwise be lost to posterity.

On the centre page of May A.R. was a picture of Chris Cullinan, VK3AXU, receiving the 1972 Higginbotham Award. Chris first became interested in Wireless in 1920 and built many crystal sets at his home in Diggers Rest near Melbourne to listen to VIM at the Domain in Melbourne, ships at sea and occasional DX from VIA Adelaide, VIH Hobart and VIS Sydney. He gained the PMG 1st Class Wireless Operators' Certificate endorsed for "spark" signed by J. Malone, Chief Manager, Telegraphs and Wireless and J. W. Brown, Sec., PMG's Department, in 1924, which prior to that time was issued by the Prime Minister's Department. Soon afterwards he was licensed as A3XW which in later years became OA3XW, VK7XW, and now VK3AXU. In 1924 he commenced his writing career and joined the staff of the newly created weekly radio magazine "The Listener In" during 1926.

In the late 1920's "The Listener In" conducted a number of public competitions to determine the most popular Amateur Wireless station. In those far-off days amateurs could transmit music on a non-commercial basis and he was one of a team visiting competitors' stations to measure DC input power. He remembers many of them including the late Howard Love, Holst OA3BY, Bert Maddocks, OA3EF, Max Howden, OA3BQ, Bill Sievers, Bill Sones and many others. He was also one of those who assisted in the arrangements for the fledgling 3LO to re-broadcast the famous American short-wave station KDKA received at the home of Mr. Arthur Goode, Tech. Ed. of the Listener In and relayed by PMG land-line to 3LO.

Chris was one of those present at the W.I.A. Victorian Division's big dinner in 1925 probably at Anzac House, Collins Street. On his move to VK7 he remained relatively inactive in the amateur radio field (except as a 2mx "fox") until 1950. He retired on May 27 this year as Chief Engineer to 3CS and celebrated his 67th birthday the previous day. He has been reluctant to go on the air in Colac fearing TVI as this is an ultra fringe area for Melbourne TV necessitating the extensive use of mast-head amplifiers. Many will welcome his re-appearance on the amateur bands in the future.

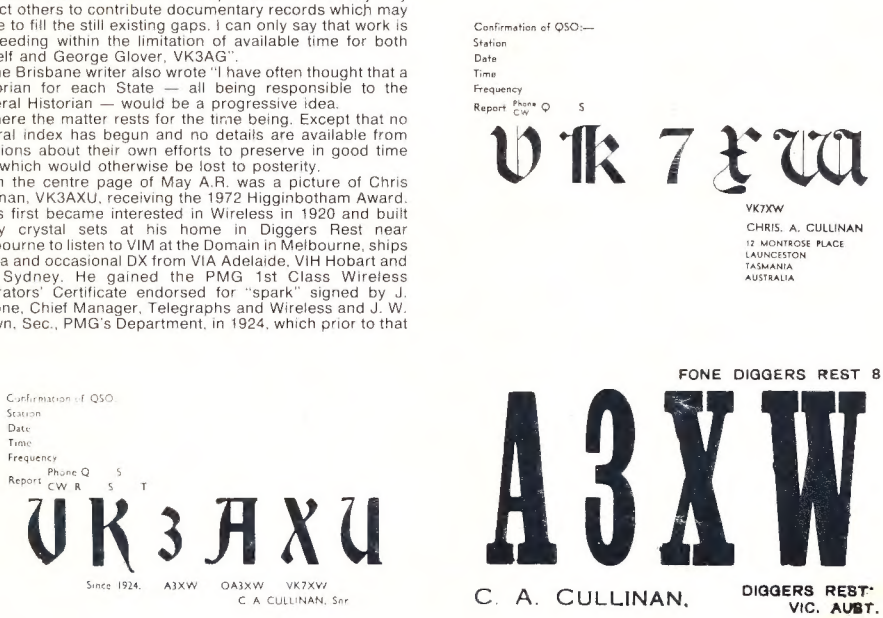

Three of the QSL cards issued by Chris Cullinan during his many years as an amateur radio operator.

20 years ago

With Ron Fisher, VK3OM

July 1953.

With so much talk of television during 1953, the July issue of Amateur Radio saw the start of a very popular series, "Amateur Television" by E. Cornelius, VK6EC. The series continued over the next five months with complete details on building a flying spot scanning system. A series well worth consulting even today if you are contemplating a bit of TV construction.

A. E. Williams, VK5BO, described his "Practical Three Element 14mc. Rotary Beam". This was a complete system, antenna, rotator, the lot.

"A Simple Three-Band Two-Stage Transmitter" by L. B. (Jock) Fisher, VK3AFF, showed how a fairly typical transmitter of the day was put together. Jock used a 6N7 as a two stage doubler, driving a single 807 in the final. Other technical articles for July were, "Design Data for use with Band-Switched Exciters" by R. G. Lane, G2BYA. Stabilizing that I.F. Channel by Jack Duncan, VK3VZ, the Technical Editor of "AR" at that time.

With the introduction of the Limited Licence just around the corner, correspondence was really hotting up. Four interesting letters putting the case both for and against were published. "Let Us Not Forget", the editorial page for July 1953, combined the sentiments of the forthcoming Remembrance Day contest with the ideals of the "Amateurs Code".

VK7RK reports, in his DX Notes page, that band conditions are very poor. It was about this time that the sun spot cycle was going through its low point.

Federal notes included details of amateurs who received awards from The Queen on the occasion of her Coronation. They were George Glover, VK3AG, Alan Brown, VK3CX, Stan Gadsen, ex VK3SW, J. W. Redrop, VK3BN, and H. Bain, VK3CC.

Another interesting piece of news was that one of the members of the C.A.F. Australian Contingent in London to take part in the coronation was L.A.C. Peter Downie, VK3APD.

new products

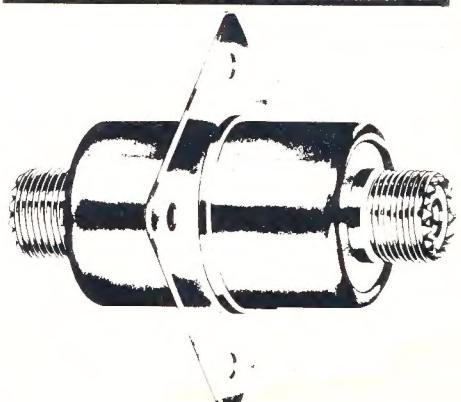

The Hy-Gain Model LA-1 is a highly effective and reliable electrical current surge arrester designed for insertion in 52 ohm and 72 ohm coaxial RF transmission lines to provide lightning protection to antenna systems and radio equipment. Originally developed to protect delicate electronic equipment aboard military aircraft, the Model LA-1, as adapted by Hy-Gain for use in coaxial RF transmission lines, is engineered to:

1. Prevent significant static build-up on the antenna and transmission line thus greatly reducing the incident probability of direct lightning strokes.
2. Safely by-pass to ground 10 or more direct or secondary strokes of lightning without damage to transmitting or receiving equipment.

The Model LA-1 has the carrying capacity to handle a fully modulated 1,000 watt transmitter with a Standing Wave Ratio on the line up to 2:1. The mechanical configuration of the Model LA-1 makes for simple installation. Designed for installation at a point in the RF transmission line closest to an effective earth ground, the transmission line is cut and two standard RF connectors are attached. The RF connectors are then attached to the connectors which are an integral part of the lightning arrester. Recommended ground uses No. 10 copper or aluminium solid wire connected to 6 ft. ground rod or equivalent (not furnished). A mounting flange integrated in the exterior housing of the Model LA-1 adapts the lightning arrester to coaxial feed-through applications at entrance panels. The small size of the LA-1 coupled with the universal mounting flange makes it convenient to install under almost any conceivable situation including mounting in the chassis of associated station equipment where protection against lightning damage is desirable.

around the trade

R. H. Cunningham Pty. Ltd. announce a working display and demonstrations during July in Melbourne, Sydney and Canberra of Sennheiser equipment currently available. Personal invitations to attend are obtainable from the Marketing Division of the company. The Sennheiser Company is headed by Professor Fritz Sennheiser — a lecturer for many years at the Hanover Institute of Technology and since the inauguration of the Company 28 years ago very ambitious research, design and planning have been carried out to make Sennheiser products the world's most acceptable radio, audio, film and television application leaders. Much of the equipment to be demonstrated will be products launched for the first time at the Hanover Fair in April 1973. These included five channel wireless microphones, new high-quality stereo headphones, various microphones and speakers.

hamads

- Eight lines free to all W.I.A. members.
- $6 per column inch for other amateurs and S.W.L.'s
- Copy should be in block letters or typescript, signed and forwarded to The Editor, P.O. Box 150, Toorak, Vic., 3142.
- Excludes commercial advertising.
- Closing date for Hamads is the 3rd day of the month preceding publication.
- QTHR means that the advertiser's name and address are correct in the current Australian Callbook.

FOR SALE

Video Tape Recorder Ampex Type VR650. 2 inch Helical with 26,000 Feet of Tape. $700.00. Vidicon Deflection Yoke $15.00. Star SR600 Comm. Rx $60.00. VK2ZPM. QTHR. Ph. (02) 476 2304.

2m-AM Tx 6/40 Mod. P.S.U. 19" Rack. 6m Tx 150W AM. 866 P.S.U. 150W 807's Mod. 20m SSB 9 MHz filter Exciter Solid State Rx HA800 2 and 6m. Fet. Con. VK3. Ph. (03) 306 2039 A.H.

Collins Station 75S3A Receiver with Amateur and S/W B.C. Coverage. Collins Speaker. 32S1 Transmitter. All as new. $1075 or will separate. Bill Watson, 7 Lambert Grove, East St. Kilda, Vic. 52 1059.

General Coverage Plus 6m Rx, fully transistorised with dual gate MOSFET's in front end. Performance on a par with FT101 as comparison. For full details write VK4XT, 36 Patrick St., Dalby, Qld., 4405.

Monobander 4 element 20 metre YAG1 Antenna similar 204BA. $90.00. VK3AIF. QTHR.

25 Watt Crystal controlled 160 Mx Tx AM/CW 12 Volt PWR Supply Transistor Modulator $50; Vinten AC FM Base Station 10 Watts Output fitted crystals for 5 channels. Excellent cond. $120; Solid State FM Transceiver CH1B fitted 12 Watts out put from 12.6V supply, complete but unpackaged. $95; Solid State FM TxCH B fitted, 25 watts output from 12.6V supply, complete but unpackaged, $60; BC 221 freq. meter. Inbuilt AC power, modulated, calibration book, $50; Hepburn - VK3AFQ - QTHR - Ph. (03) 96 2414 A.H.

Trio 9R-59D Communications Rx. Unmarked, in new condition. $120. VK3ALC. QTHR. Ph. Buangor 518.

WANTED

Geloso Type N774 Tuning Condenser. .23/209pF. As used with Geloso Pi Coupler Type N4/113. Mal Sinclair, VK2BMS. QTHR. Ph. (02) 407 0261 Bus., (02) 95 2362 A.H.

Complete File of A.R.'s Jan 1960 to Dec 1972 (or portion of period). R. Cook, P.O. Box 192, Maitland, N.S.W. 2320.

Gill Motor urgently required. Please search dark corners, tell friends. Gray, VK2IJ, 34 Beauty Drive, Whale Beach, 2107. Ph. (02) 919 4417.

Swan 240 Transceiver with Power Pack. Particulars to VK4TI, QTHR.

H.F. Mobile Antenna for 10 to 80 metre operation. Write M. Taylor, 36 Patrick St., Dalby, 4405.

Geloso VF0 Type 4/105 VK3ACA QTHR Ph. (03) 306 2069.

Ken 2 Metre Tx Rx FT2F. FT101 or FT200, FTV650. Ph. (02) 663 7336 or write VK2ZKA, 151/3 Slattery Pl., Kingsford, 2032.

letters to editor

Any opinion expressed under this heading is the individual opinion of the writer and does not necessarily coincide with that of the Publishers.

Dear Sir,

I was dissapointed when the form of presentation of Ionospheric Predictions was changed in our magazine. The efforts of those compiling this data in its present form are appreciated but the former presentation was more helpful.

Being a technical magazine, I feel A.R. should be concerned with the causes and reasons for variations in propagation conditions. The charts showing MUF, ALF, etc. encourage comparisons with actual conditions and as well indicate the reasons for limitations. I would suggest that commentary on past disturbances and prediction of likely disturbances would be helpful. The April issue of "Wireless World" (P.173) is an example.

One could take issue with the Editor's note referring to correspondence on this matter in the May issue of A.R. Surely we should make space available for this type of information. Perhaps a limitation to, say, one page for non technical type articles, and editing of reports on various activities, could assist in providing a more informative and educational presentation of ionospheric data.

Yours faithfully, G. E. Wiencke, VK5GN.

(The exclusion of Ionospheric Predictions from this issue is due only to the non-arrival of the July information from the Ionospheric Predictions Service Division — Ed.)

16th jamboree-on-the-air

The 16th Jamboree-on-the-Air will be held over the weekend of 20th-21st October, 1973.

As in the past two years, the starting time will be 00.01 hours LOCAL TIME on Saturday, 20th October, and the event will terminate 48 hours later, i.e. at 23.59 hours on Sunday, 21st October. Please note that these are only suggested times, if it is more convenient for you to operate on the Friday evening then, by all means, do so, for you will be sure to find many other stations doing the same.

The basic rules remain unchanged.

This year's participation certificate has been designed by a Brazilian Scout and bulk supplies are being mailed to the National Organizer, Noel Lynch, VK4ZNI.

Thanks to a grant from the Japanese Expo '70 Foundation, a 16th J.O.T.A. poster has been produced and supplies of these will also be forwarded direct to the National Organizer for distribution.

BRANCH ORGANISERS

National Headquarters, The Scout Association of Australia, has confirmed the appointments of the following Branch Organisers:

Geoff Perkins,
P.O. Box 5395, Boroko, Papua New Guinea.

Branch H.Q. Commissioner Ian Clarke,
C/- Queensland Branch Headquarters,
Box 50, P.O. BROADWAY, Brisbane, Q. 4000

Mr. Ray Lawrence,
Branch Commissioner for Leader Training,
New South Wales Branch Headquarters,
203 Clarence Street, SYDNEY, N.S.W. 2000

Mr. Leslie D. Marmo,
50 Howitt Street,
South Yarra, Melbourne, V.3141.

Mr. Ray Jeffrey,
8 MacRobie Road, SOUTH HOBART, T.7000

Mr. Steven Johnston (VK5ZNJ)
7 Hayles Road,
ELIZABETH PARK, Adelaide, S.A. 5113

Branch H.Q. Commissioner Peter Hughes (VK6HU)
58 Preston Street,
COMO, Perth, W.A. 6152.

V.H.F. PARTICIPATION

"I cannot help but feel that not enough use is made of the services of those groups of very keen members of the W.I.A. known as the V.H.F. Group and I certainly commend their interest in JOTA to you all. Whilst the range of some of the equipment operated by their members may not be as extensive as their counterparts on the H.F. frequencies, their services have been very much appreciated by those Groups to whom they offered their services in the past. The association has generally been a most happy one for both the Groups concerned and the Operator and I would appreciate some indication of their participation in your Branch activity in this year's Reports."

This statement by Noel VK4ZNI, is included in a bulletin issued to all parties in Australia concerned in organising and publicising the 16th Jamboree-on-the-Air.

silent keys

It is with deep regret that we record the passing of—
VK3HL—Mr. Allan Hutchings
VK7BQ—Mr. Len Crooks

OBITUARY

Cecil Waring, VK3YW writes about Allan Hutchings, VK3HL of "Bryn Avon" Callawadda passing away about May 8. "Allan", he writes, "was a real, 'old timer' being licensed in 1922 in the spark era. The family at 'Bryn Avon' was unique from the Amateur radio angle as at one period both Allan's mother and sister held amateur licenses at the same address. He was well known in the DX field and a few years ago turned his contacts into personal ones via a world trip. His passing leaves one more break in the line of our pioneers, and as one of radio's gentlemen he will be missed."

key section

with Deane Blackman VK3TX
Box 382, Clayton, Vic., 3168.

Peter 4PJ, sent me a note, too late for June A.R., concerning an "unofficial" CW contest as a pipe opener for the RD. It will be on again July 15, 0800-1400A. One contact per band; 80, 40, 20; VK call area. No logs required!! Tell me or Peter how you enjoyed it and we will try and make it suit you better next time.

VK3AXZ has been running slow morse on 160 mx at 1900 K nightly on 1806 KHz for some months. It is a single handed effort of considerable magnitude and Stephen would appreciate some help. Anybody willing — ring 306 4957.

160 mx is an attractive band for slow morse because a broadcast receiver can be coaxed into service, which helps those just starting. Without a BFO, of course, one still has problems, which might be met if the transmission were A2 (MCW). I have had few (and mixed) replies to my call in this column last year for views on allowing MCW on 160/80. Do you have any thoughts?

When we were getting started, there was some discussion about the name "Key Section". The name in fact was the name of an actual group within the W.I.A. in the 20's and 30's. But not everyone, Stan 4SS tells me, calls them keys. They are also "manipulators" (F), "tasto telegrafico" (I), telegrafnokkel (LA). Marconi called them "correspondents" — hardly an apt term nowadays considering how many are unable to respond to a corresponder.

The QSL card, designed by a Brazilian Scout, for the 1973 Jamboree-on-the-Air. It is deep red card with the details in yellow.

BOOKS OF INTEREST FOR AMATEUR OPERATORS

PHILLIPS—**1973 POCKET BOOK.** Electron Tubes, Semi-conductors, etc.	**$2.00**
WARRING—**BEGINNER'S GUIDE TO PRACTICAL ENGINEERING**	**$3.90**
WARRING—**MAKING TRANSISTOR RADIOS.** A Beginners Guide	**$3.50**
F. H. BELT—**KWIK-FIX T.V. SERVICE MANUAL**	**$7.40**
DEZETTEL—**SEMI-CONDUCTOR AMATEUR PROJECTS**	**$5.95**
A.R.R.L.—**RADIO AMATEURS HANDBOOK**	**$6.95**
A.R.R.L.—**THE A.R.R.L. ANTENNA BOOK**	**$4.35**
G.E.—**ELECTRONICS EXPERIMENTERS CIRCUIT MANUAL**	**$4.00**
U.S. NAVY—**SECOND LEVEL BASIC ELECTRONICS**	**$3.65**
PATCHETT—**COLOUR TELEVISION—PAL SYSTEM**	**$9.25**
WARD—**DIGITAL ELECTRONICS**	**$7.40**

Add Postages: Local 35 cents, Interstate 65 cents

McGILL'S AUTHORISED NEWSAGENCY

Established 1860 **187-193 ELIZABETH STREET, MELBOURNE, VIC., 3000**

"The G.P.O. is opposite" **Phones 60-1475-6-7**

AMATEUR ANTENNAS

Superior Quality

All Imported

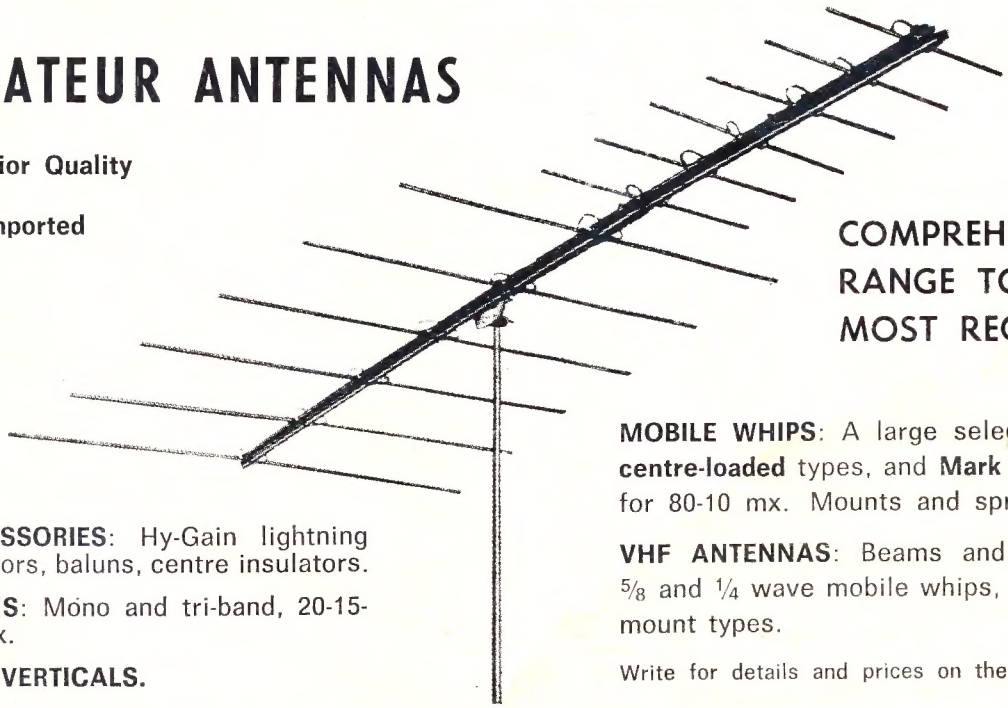

COMPREHENSIVE RANGE TO SUIT MOST REQUIREMENTS

MOBILE WHIPS: A large selection of **Hy-Gain centre-loaded** types, and **Mark Mobile Helicals,** for 80-10 mx. Mounts and springs, etc.

VHF ANTENNAS: Beams and ground planes, 5/8 and 1/4 wave mobile whips, including gutter-mount types.

Write for details and prices on the types you require.

ACCESSORIES: Hy-Gain lightning arrestors, baluns, centre insulators.

BEAMS: Mono and tri-band, 20-15-10 mx.

TRAP-VERTICALS.

BAIL ELECTRONIC SERVICES

60 Shannon St., Box Hill North, Vic., 3129. Ph. 89-2213

N.S.W. Rep.: **STEPHEN KUHL, P.O. Box 56, Mascot, N.S.W., 2020.** Telephone: Day 667-1650 (AH 371-5445)
South Aust. Rep.: **FARMERS RADIO PTY. LTD., 257 Angas St., Adelaide, S.A., 5000.** Telephone 23-1268
Western Aust. Rep.: **H. R. PRIDE, 26 Lockhart Street, Como, W.A., 6152.** Telephone 60-4379

BAIL ELECTRONIC SERVICES

60 Shannon St., Box Hill North, Vic., 3129. Ph. 89-2213

N.S.W. Rep.: **STEPHEN KUHL, P.O. Box 56, Mascot, N.S.W., 2020.** Telephone: Day 667-1650 (AH 371-5445)
South Aust. Rep.: **FARMERS RADIO PTY. LTD., 257 Angas St., Adelaide, S.A., 5000.** Telephone 23-1268
Western Aust. Rep.: **H. R. PRIDE, 26 Lockhart Street, Como, W.A.. 6152.** Telephone 60-4379

SOLE AUSTRALIAN AGENTS FOR

Yaesu "F" Series

S.S.B. EQUIPMENT

YAESU FT-620 6Mx SSB TRANSCEIVER

FEATURES

1) Built-in VFO, with range of 500kHz, enables continuous coverage of 50 to 54MHz in 8 segments with 1kHz read-out. Crystals installed for 52-54MHz.
2) For schedule QSOs or for mobile operation the built-in crystal oscillator unit is a handy alternative to the VFO. Four channels are available in each of the 8 500kHz segments. Crystals are not provided.
3) Runs 20W DC input on USB, LSB and CW; 8W AM input. All solid state.
4) Effective built-in noise blanker for suppression of ignition noise.
5) Optional 100kHz frequency calibrator.
6) Built-in clarifier circuit permitting adjustment of receive frequency by ∓ 4kHz with respect to transmit frequency.
7) 12v DC / 100, 110, 117, 200, 220, 234 VAC operation.
8) Built-in 10cm diameter speaker.
9) Antenna impedance 50 Ohms unbalanced.
10) Carrier suppression, better than-40dB. Sideband suppression up to -40dB.
11) Spurious radiation intensity up to -60dB.
12) Frequency stability better than 100Hz in any 30 minute period after warm-up.
13) Audio frequency range 300-2700Hz within ∓3dB.
14) Receiver sensitivity for SSB, CW, 0.5 microvolt for +10dB S/N. Receiver sensitivity for AM, 1 microvolt for +10dB S/N.
15) Selectivity 2.4kHz/-6dB; 4.1kHz/-50dB (6kHz/-6dB; 10 kHz/-50dB AM filter optional).
16) Image ratio more than 60dB.
17) Power consumption, AC, receive, 16VA, transmit with 10W CW output, 60VA. DC, receive, 0.3A, transmit with 10W CW output, 2A, at 13.5V supply.

Price includes CAL and AM Filter: $435.00.

Prices include Sales Tax. Freight extra. Prices and specs. subject to change.

BAIL ELECTRONIC SERVICES

60 Shannon St., Box Hill North, Vic., 3129. Phone 89-2213

N.S.W. Rep.: **STEPHEN KUHL, P.O. Box 56, Mascot, N.S.W., 2020.** Telephone: Day 667-1650 (AH 371-5445)
South Aust. Rep.: **FARMERS RADIO PTY. LTD., 257 Angas St., Adelaide, S.A., 5000.** Telephone 23-1268
Western Aust. Rep.: **H. R. PRIDE, 26 Lockhart Street, Como, W.A., 6152.** Telephone 60-4379